NOTICE - THIS DRAWING CONTAINS HYDRO-GEAR PROPRIETARY INFORMATION. NEITHER RECEIPT NOR POSSESSION THEREOF CONFERS ANY RIGHT TO REPRODUCE, USE, OR DISCLOSE, IN WHOLE OR PART, ANY SUCH INFORMATION WITHOUT WRITTEN AUTHORIZATION FROM HYDRO-GEAR.
THE SPECIFICATIONS AND PRODUCT PROFILE DEPICTED HEREIN ARE APPROXIMATE REPRESENTATIONS SUBJECT TO CHANGE WITHOUT NOTICE OR OBLIGATION. CONSULT YOUR HYDRO-GEAR REPRESENTATIVE TO OBTAIN THE ENGINEERING INFORMATION APPROPRIATE TO YOUR APPLICATION.

NOTES:

1. DIRECTIONS REFLECT CCW INPUT ROTATION.
2. MAX TORQUE ON SHIFTER ARMS: 160 IN-LBS
3. MAX TORQUE ON CONTROL ARM: 200 IN-LBS

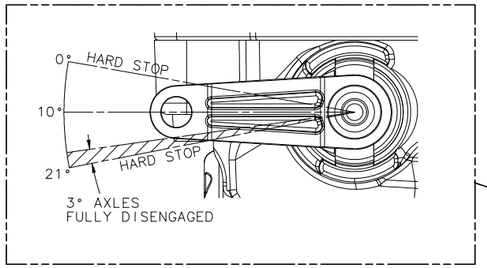

MAX INPUT SHAFT SPEED
2600 RPM

OIL VOLUME	1802 mL
UNIT WEIGHT	21.4 LBS

ROTATION DIRECTIONS		
INPUT SHAFT	CONTROL ARM	AXLE SHAFT
CCW	A	A
CCW	B	B
CW	A	B
CW	B	A

	MAXIMUM WEIGHT ON DRIVE TIRE (LB)		
REDUCTION RATIO	TIRE DIAMETER (IN)		
	12	14	16
30.43:1	290	290	290

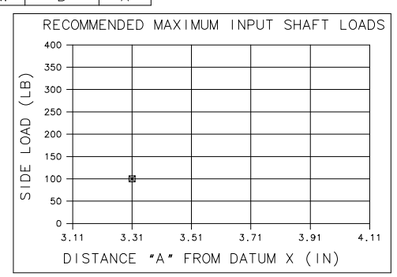

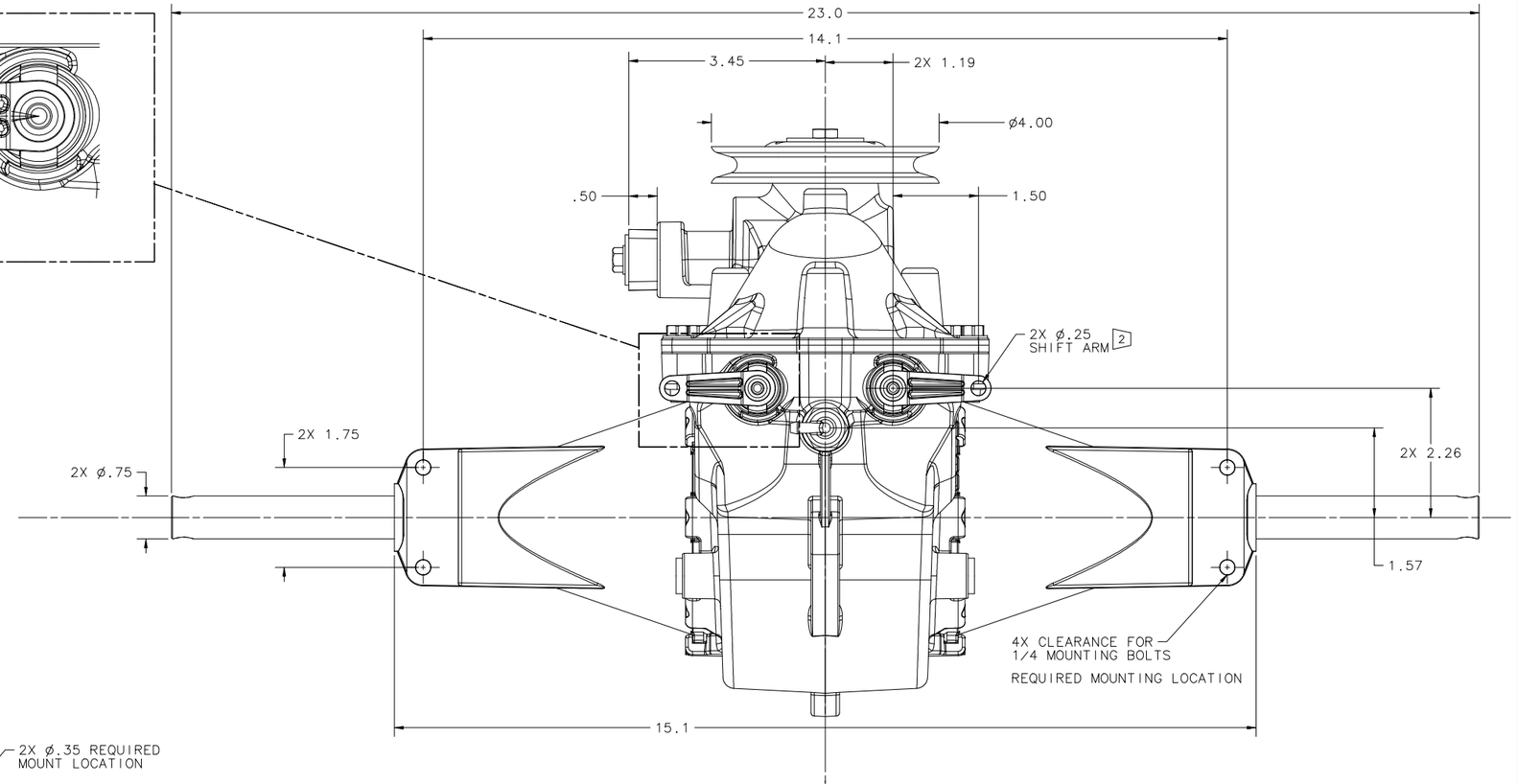

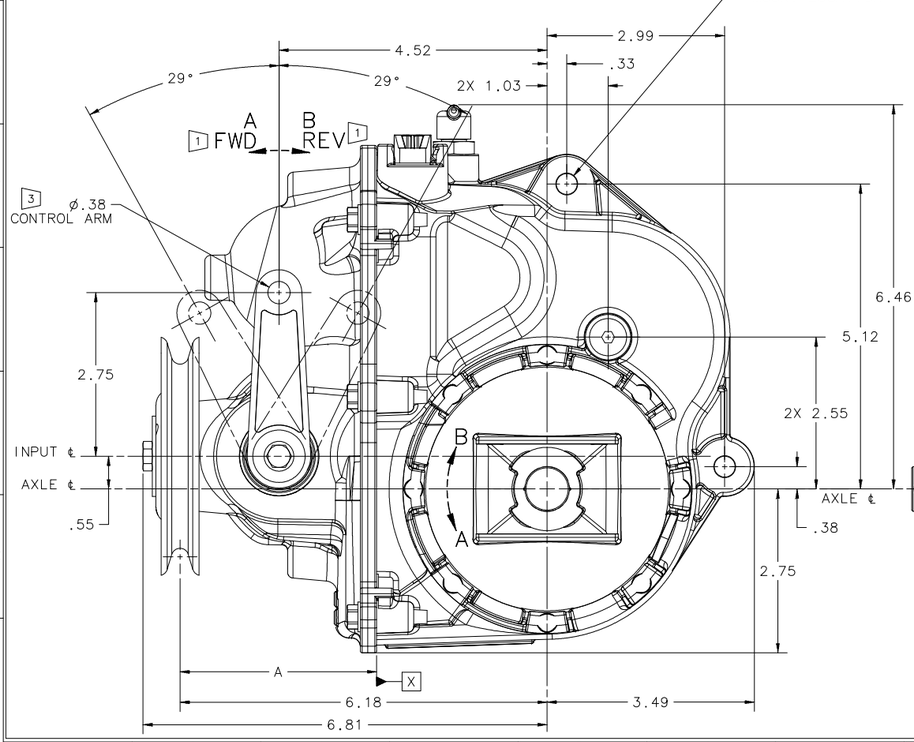

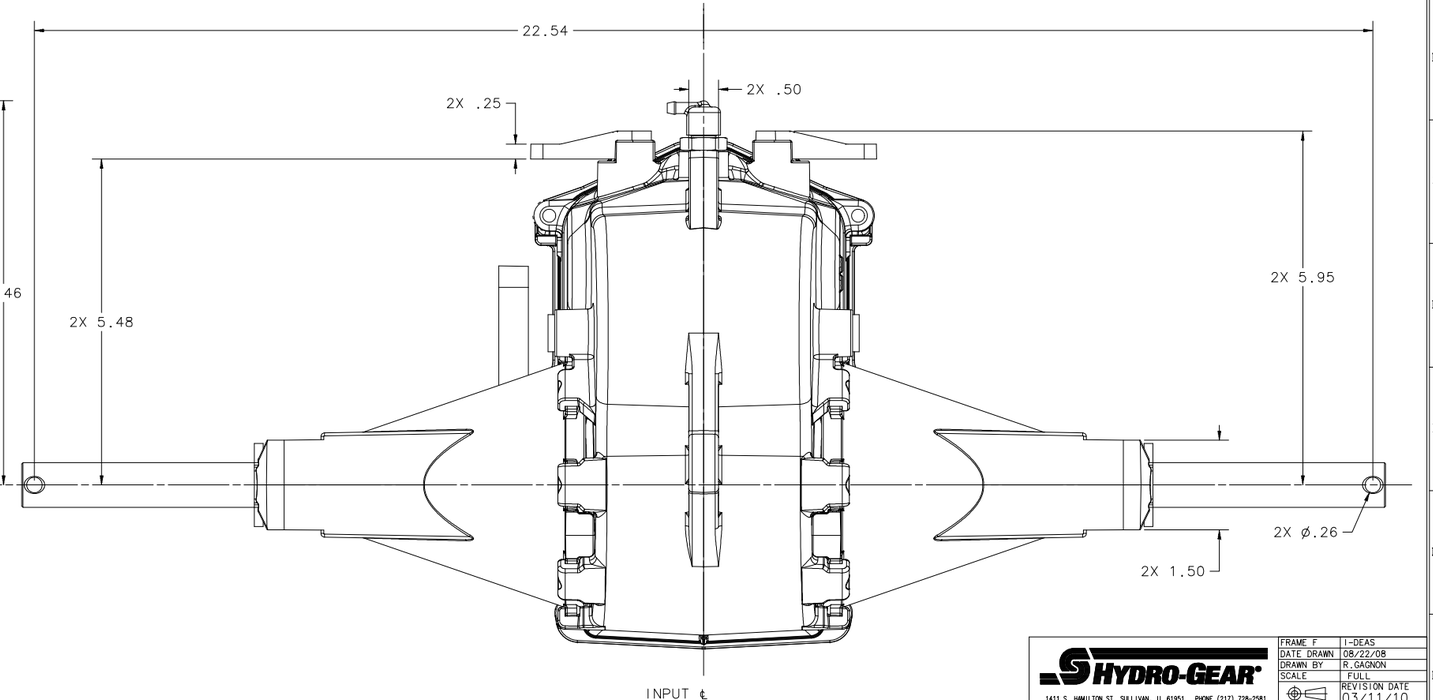

HYDRO-GEAR
1411 S. HAMILTON ST, SULLIVAN, IL 61951 PHONE (217) 728-2581

FRAME F	I-DEAS
DATE DRAWN	08/22/08
DRAWN BY	R. GAGNON
SCALE	FULL
REVISION DATE	03/11/10
PART NUMBER	71876
CHG	P5

NAME SST
SALES DRAWING