Series variation

Multi-fluid control direct acting 2, 3-port solenoid valve

* Refer to page 328 for dry air (-Z).

No. of ports	Model		Configuration	Actuation		Air	Low vacuum [1.33 x 10^2 Pa (abs)]	
2-port	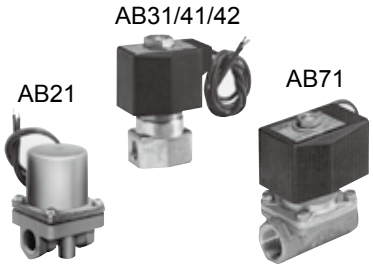	AB21	Single unit	NC		●		
		AB31				●	●	
		AB41				●	●	
		AB42		NO		●	●	
		AB71		NC		●		
	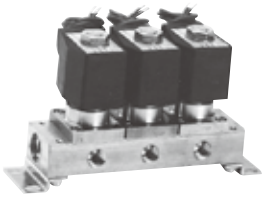	GAB312	Manifold	NC	Common supply	●	●	
		GAB352			Individual supply	●	●	
		GAB412			Common supply	●	●	
		GAB452			Individual supply	●	●	
		GAB422		NO	Common supply	●	●	
3-port		AG31	Single unit	Universal		●	●	
		AG41				●	●	
		AG33		NC pressurization		●	●	
		AG43				●	●	
		AG34		NO pressurization		●	●	
		AG44				●	●	
	Manifold 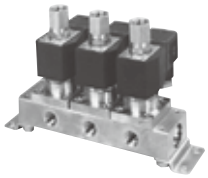	GAG31	Manifold	Universal	Common supply/ individual exhaust	●	●	
		GAG35			Common supply separate flow	●	●	
		GAG41			Common supply/ individual exhaust	●	●	
		GAG45			Common supply separate flow	●	●	
	Actuator 	GAG33		NC pressurization	Common supply/individual exhaust	●	●	
		GAG43				●	●	
		GAG34	Actuator	NO pressurization		●	●	
		GAG44				●	●	

Working fluid					Port size						Page
Water	Kerosene	Oil [50 mm²/s or less]	Hot water	Steam	Rc1/8	Rc1/4	Rc3/8	Rc1/2	Rc3/4	Rc1	
●		●			●	●					150
●	●	●	●	●	●*4	●*4					154
●	●	●	●	●		●*4	●*4	●*4			154
●	●	●	●	●		●*4	●*4				154
●	●	●*1						●	●	●	168
●	●	●	●	●		●*2	●*2				172
●	●	●	●	●		●*2	●*2				172
●	●	●	●	●		●*2	●*2				172
●	●	●	●	●		●*2	●*2				172
●	●	●	●	●		●*2	●*2				182
●	●	●	●	●	●*4	●*4					190
●	●	●	●	●		●*4	●*4				190
●	●	●	●	●	●*4	●*4					208
●	●	●	●	●		●*4	●*4				208
●	●	●	●		●*4	●*4					226
●	●	●	●			●*4	●*4				226
●	●	●	●	●	●*2 *3	●*2 *3					198
●	●	●	●	●	●*2 *3	●*2 *3					198
●	●	●	●	●		●*2 *3	●*2 *3				198
●	●	●	●	●		●*2 *3	●*2 *3				198
●	●	●	●	●	●*2 *3	●*2 *3					216
●	●	●	●	●		●*2 *3	●*2 *3				216
●	●	●	●		●*2 *3	●*2 *3					234
●	●	●	●			●*2 *3	●*2 *3				234

Refer to page 148 for details on the coil system.

*1 : 20 mm²/s for AB71 Series.
*2 : Port A: Rc1/4, port C: Rc3/8
*3 : ● indicates NO port.
*4 : Refer to each How to order column for the thread.

Coil selection guide

● Coil housing types and selection guide

Various types are available for general purpose valve according to the application.
Refer to the structure and features to select the optimum model.

For direct acting 2, 3-port solenoid valve (AB/GAB/AG/GAG)

Coil system → Open frame

				Appearance
Thermal class B mold	● For DC and AC (50/60 Hz common) ● Degree of protection: IP61 or equivalent ● Cannot be used outdoors	Grommet lead wire	● Lead wire length 300 mm	 Blank / 6C
Thermal class B mold	● For DC and AC (50/60 Hz common) ● Degree of protection: IP61 or equivalent ● Cannot be used outdoors	DIN terminal box	● Easy wiring and maintenance ● Enhanced electrical safety (by grounding the ground terminal) ● Light available (Optional - 100 VAC, 200 VAC and 24 VDC)	 2E 2G 2H / 6E 6G 6H
Thermal class B mold	● For DC and AC (50/60 Hz common) ● Degree of protection: IP65 or equivalent ● Cannot be used outdoors	Lead wire	● Lead wire length 300 mm ● Conduit (CTC19) for direct piping can be attached	 3A
Thermal class B mold	● For DC and AC (50/60 Hz common) ● Degree of protection: IP21 or equivalent ● Cannot be used outdoors	HP terminal box	● Easy wiring ● Light available (Optional - 100 VAC, 200 VAC, 12 VDC, 24 VDC, 100 VDC)	 3M 3N
Thermal class B mold	● For DC and AC (50/60 Hz common) ● Degree of protection: IP65 or equivalent ● Cannot be used outdoors	HP terminal box	● Easy wiring ● Light available (Optional - 100 VAC, 200 VAC, 12 VDC, 24 VDC, 100 VDC)	 3I 3J
Thermal class H taped	● AC dedicated (50/60 Hz common) ● High temperature fluids and high ambient temperatures usable ● Degree of protection: IP00 ● Cannot be used outdoors	Lead wire	● Lead wire length 300 mm ● Conduit (CTC19) for direct piping can be attached.	 4A
		HP terminal box	● Easy wiring ● Light available (optional -100 VAC, 200 VAC)	 4M 4N
Thermal class B mold with diode	● Diode in the coil converts AC to DC. ● Perfect for places where whirring noise should be prevented. ● AC dedicated (50/60 Hz common) ● Degree of protection: IP65 or equivalent ● Cannot be used outdoors	Lead wire	● Lead wire length 300 mm ● Conduit (CTC19) for direct piping can be attached.	 5A
Thermal class B mold with diode	● Diode in the coil converts AC to DC. ● Perfect for places where whirring noise should be prevented. ● AC dedicated (50/60 Hz common) ● Degree of protection: IP21 or equivalent ● Cannot be used outdoors	HP terminal box	● Easy wiring ● Light available (Optional - 100/200 VAC)	 5M 5N
Thermal class B mold with diode	● Diode in the coil converts AC to DC. ● Perfect for places where whirring noise should be prevented. ● AC dedicated (50/60 Hz common) ● Degree of protection: IP65 or equivalent ● Cannot be used outdoors	HP terminal box	● Easy wiring ● Light available (Optional - 100/200 VAC)	 5I 5J
		Conduit	● Use a conduit (CTC19 or G1/2) when using direct conduit wiring for the open frame lead wire.	 G H

● Repair parts compatibility table by coil option

Coil option code	Supported voltage	Repair parts			
		Plunger assembly	Core assembly	Coil assembly	Actuator assembly *1
0 or blank	AC	○	○	○	-
6C *2, *3	DC	-	-	-	○
2E 2G 2H	AC	○	○	○	-
2E 2G 2H	DC	○	○	○	-
6E 6G 6H *2, *3	DC	-	-	-	○
3A	AC	○	○	○	-
	DC		○	○	-
3M 3N	AC	○	○	○	-
	DC		○	○	-
3I 3J	AC	○	○	○	-
	DC		○	○	-
4A	AC	○	○	○	-
4M 4N	AC	○	○	○	-
5A	AC	○	○	○	-
5M 5N	AC	○	○	○	-
5I 5J	AC	○	○	○	-

*1 : The actuator assembly includes the coil assembly, core assembly and plunger assembly.
*2 : As 6C, 6E, 6G and 6H are dedicated parts, they are provided as part of the actuator assembly.
*3 : AB41 only.

Direct acting 2-port solenoid valve
(General purpose valve)

AB21 Series

- NC
- Port size: Rc1/8, Rc1/4

RoHS CAD

JIS symbol

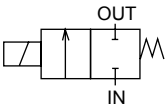

Common specifications

1 MPa ≈ 145.0 psi, 1 MPa = 10 bar

Descriptions	AB21
Working fluid	Air/water/kerosene/oil (50 mm^2/s or less)
Working pressure differential MPa	0 to 1.5 (refer to max. working pressure differential in individual specifications)
Max. working pressure MPa	1.5 (≈220 psi, 15 bar)
Proof pressure (water pressure) MPa	3 (≈440 psi, 30 bar)
Fluid temperature °C	-10 (14°F) to 40 (104°F) (no freezing)
Ambient temperature °C	-20 (-4°F) to 50 (122°F)
Thermal class	Class 130 (B)
Atmosphere	Place free of corrosive gas and explosive gas
Valve structure	Direct acting poppet structure
Valve seat leakage cm^3/min(ANR)	0.2 or less
Mounting orientation	Unrestricted

Individual specifications

1 MPa ≈ 145.0 psi, 1 MPa = 10 bar

Descriptions / Model No.	Port size	Orifice size (mm)	Max. working pressure differential (MPa)						Rated voltage	Apparent power (VA)				Power consumption (W)		Weight (kg)
			Air		Water/kerosene		Oil (50 mm^2/s)			When holding		When starting		AC 50/60 Hz	DC	
			AC	DC	AC	DC	AC	DC		50 Hz	60 Hz	50 Hz	60 Hz			
AB21-01-1	Rc1/8	1.5	1.5	1.0	1.5	1.0	0.9	1.0	100 VAC 50/60 Hz *2 200 VAC 50/60 Hz *2 24 VDC	11	9	15.4	12.6	5.5/4.2	7	0.23 (Aluminum) 0.36 (Copper alloy)
AB21-01-2		2.0	1.0	0.6	1.0	0.6	0.5	0.6								
AB21-01-3		3.0	0.7	0.2	0.4	0.2	0.25	0.2								
AB21-01-5		4.0	0.4	0.1	0.2	0.1	0.1	0.1								
AB21-02-1	Rc1/4	1.5	1.5	1.0	1.5	1.0	0.9	1.0								
AB21-02-2		2.0	1.0	0.6	1.0	0.6	0.5	0.6								
AB21-02-3		3.0	0.7	0.2	0.4	0.2	0.25	0.2								
AB21-02-5		4.0	0.4	0.1	0.2	0.1	0.1	0.1								

Flow characteristics

Model No.	Port size	Orifice size (mm)	Flow characteristics		
			C[dm^3/(s·bar)]	b	Cv
NC					
AB21-01-1	Rc1/8	1.5	0.29	0.51	0.1
AB21-01-2		2.0	0.53	0.55	0.15
AB21-01-3		3.0	1.1	0.52	0.3
AB21-01-5		4.0	1.8	0.35	0.4
AB21-02-1	Rc1/4	1.5	0.29	0.51	0.1
AB21-02-2		2.0	0.53	0.55	0.15
AB21-02-3		3.0	1.1	0.52	0.3
AB21-02-5		4.0	1.8	0.35	0.4

*1 : Effective cross-sectional area S and sonic conductance C are converted as S ≈ 5.0 x C.
*2 : The 100 VAC (50/60 Hz) can be used with 110 VAC (60 Hz). The 200 VAC (50/60 Hz) can be used with 220 VAC (60 Hz).

How to order

AB21 - 01 - 1 - A 00B - AC100V

- AB21: Model No.
- 01: Ⓐ Port size
- 1: Ⓑ Orifice size
- A: Ⓒ Body/sealant combination *1 *2
- 00B: Ⓓ Option
- AC100V: Ⓔ Rated voltage *3

Code	Content
Ⓐ Port size	
01	Rc1/8
02	Rc1/4

Ⓑ Orifice size	
1	φ1.5
2	φ2
3	φ3
5	φ4

Ⓒ Body/sealant combination

		Body	Seal	Remarks
Blank	Std.	Aluminum	Nitrile rubber	Air/kerosene/oil
2	Option		Fluoro rubber	Air/kerosene/oil
A		Copper alloy	Nitrile rubber	Air/water/kerosene/oil
B			Fluoro rubber	Air/water/kerosene/oil

Refer to Intro Page 39 for reference on material combinations.

Ⓓ Option		
Blank	None	
00B	With mounting plate	

Ⓔ Rated voltage		
AC100V	100 VAC 50/60 Hz, 110 VAC 60 Hz	For other voltages, contact CKD.
AC200V	200 VAC 50/60 Hz, 220 VAC 60 Hz	
DC24V	24 VDC	

[Example of model No.]

AB21-01-1-A00B-AC100V

Model: AB21

Ⓐ Port size : Rc1/8
Ⓑ Orifice size : φ1.5
Ⓒ Body/sealant combination : Body - copper alloy, sealant - nitrile rubber
Ⓓ Option : Mounting plate
Ⓔ Rated voltage : 100 VAC 50/60 Hz, 110 VAC 60 Hz

⚠ Precautions for model No. selection

*1 : For Ⓑ 1 (φ1.5 orifice), only Item Ⓒ A/B are available.
*2 : When the fluid is water, select the copper alloy (option code: A or B) body.
*3 : The voltage fluctuation range must be within ±10% of the rated voltage.
*4 : Leave Item Ⓒ blank for standard. However, to select 00B for Item Ⓓ, indicate 0 for Item Ⓒ.

Internal structure and parts list

● AB21 Series

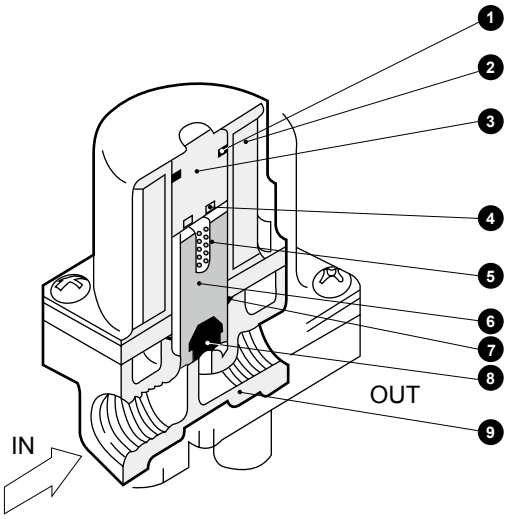

No.	Part name	Material
1	O-ring	Fluoro rubber
2	Coil	-
3	Core assembly	Stainless steel
4	Shading coil	Copper
5	Plunger spring	Stainless steel
6	Plunger	Stainless steel
7	O-ring	Nitrile or fluoro rubber
8	Seal	Nitrile or fluoro rubber
9	Body	Aluminum or copper alloy

Dimensions CAD

● AB21-01/02-1 to 5-*

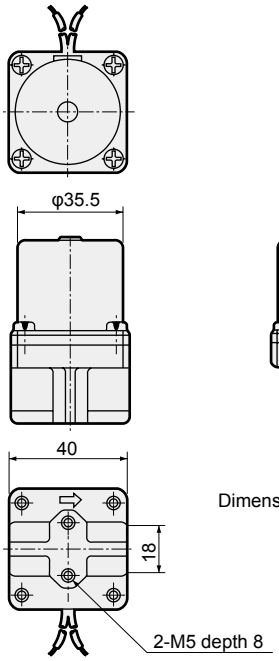

* Lead wire length
250 mm

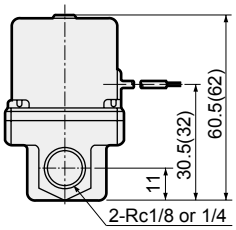

Dimensions shown in ( ) are for copper alloy body.

● With mounting plate
AB21-01/02-1 to 5-*00B

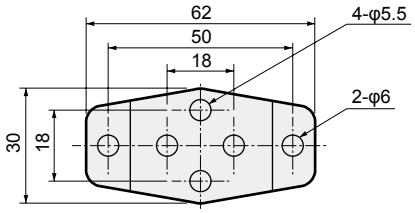

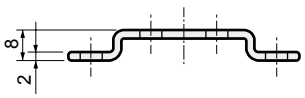

Mounting plate
No,1
GE-100106

MEMO

Direct acting 2-port solenoid valve, single unit
(General purpose valve)

AB31/AB41 Series ● NC
AB42 Series ● NO

● Port size: Rc1/8 to Rc1/2

Refer to the Ending for details.

JIS symbol

● AB31/41: NC

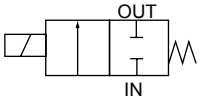

● AB42: NO

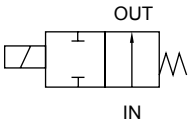

Common specifications

1 MPa ≈ 145.0 psi, 1 MPa = 10 bar

Descriptions	Standard specifications	Optional specifications	
Working fluid	Air/low vacuum [1.33 x 10^2 Pa (abs)]/water/kerosene/oil (50 mm^2/s or less)	Hot water	Steam
Working pressure differential MPa	0 to 5 (refer to max. working pressure differential in individual specifications.)		
Proof pressure (water pressure) MPa	25 (≈3600 psi, 250 bar)		
Fluid temperature (*1) °C	-10 (14°F) to 60 (140°F)	-10 (14°F) to 90 (194°F)	-10 (14°F) to 184 (363.2°F)
Ambient temperature °C	-20 (-4°F) to 60 (140°F)	-20 (-4°F) to 100 (212°F)	
Thermal class	Class 130 (B)	Class 180 (H)	
Atmosphere	Place free of corrosive gas and explosive gas		
Valve structure	Direct acting poppet structure		
Valve seat leakage cm^3/min(ANR)	0.2 or less (air)		300 or less (air)
Mounting orientation	Unrestricted		
Body/seal material	Copper alloy/nitrile rubber	Copper alloy/EPM rubber	Copper alloy/PTFE

*1: No freezing.

Individual specifications

1 MPa ≈ 145.0 psi, 1 MPa = 10 bar

Descriptions / Model No.	Port size	Orifice size (mm)	Max. working pressure differential (MPa) Air AC	Air DC	Water/hot water/kerosene AC	Water/hot water/kerosene DC	Oil (50 mm^2/s) AC	Oil (50 mm^2/s) DC	Steam AC	Max. working pressure (MPa)	Rated voltage	Apparent power (VA) Holding 50 Hz	Holding 60 Hz	Starting 50 Hz	Starting 60 Hz	Power consump (W) AC 50/60 Hz	DC	Weight (kg)
NC																		
AB31- 01/02 -1	Rc1/8 Rc1/4	1.5	2.5	2.5	2.5	2.5	2.5	2.5	1.0	5 (≈730 psi, 50 bar) (Fluid: Steam For 1)	100 VAC 50/60 Hz *9 200 VAC 50/60 Hz *9 12 VDC 24 VDC 48 VDC 100 VDC	12	10	17	14	5.2/3.8	11 (8.1)*5	0.35
-2		2.0	1.5	1.5	1.5	1.5	1.5	1.5	1.0									
-3		3.0	1.0	0.5	0.7	0.5	0.5	0.5	0.7									
-4		3.5	0.6	0.4	0.5	0.4	0.4	0.4	0.5									
-5		4.0	0.4	0.25	0.3	0.25	0.25	0.25	0.3									
-6		5.0	0.2	0.15	0.15	0.15	0.15	0.15	0.15									
AB41- 02/03 -1	Rc1/4 Rc3/8	1.5	5.0	4.0	4.5	4.0	4.0	4.0	1.0			18	15	29	24	6.7/5.7	11 (10.4)*5 (7)*7	0.43 (Rc1/4) 0.45 (Rc3/8)
-2		2.0	3.0	2.5	2.7	2.5	2.5	2.5	1.0									
-3		3.0	1.5	0.9	1.3	0.9	0.9	0.9	1.0									
-4		3.5	1.2	0.6	0.9	0.6	0.6	0.6	0.9									
-5		4.0	1.0	0.5	0.7	0.5	0.5	0.5	0.7									
-6		5.0	0.6	0.25	0.4	0.25	0.25	0.25	0.4									
-7		7.0	0.25	0.1	0.2	0.1	0.15	0.1	0.2									
AB41- 03/04 -8	Rc3/8 Rc1/2	10.0	0.1	0.05 (0.03) *8	0.1	0.05 (0.03) *8	0.05	0.05 (0.03) *8										0.54
NO																		
AB42- 02/03 -1	Rc1/4 Rc3/8	1.5	2.0	2.0	2.0	2.0	2.0	2.0	1.0	2 (≈290 psi, 20 bar) (Fluid: Steam For 1)		22	18	35	29	8.7/6.7	15.5 (14)*5	0.50 (Rc1/4) 0.52 (Rc3/8)
-2		2.0	1.0	1.0	1.0	1.0	1.0	1.0	1.0									
-3		3.0	0.7	0.7	0.7	0.7	0.7	0.7	0.7									
-4		3.5	0.5	0.5	0.5	0.5	0.5	0.5	0.5									
-5		4.0	0.4	0.4	0.4	0.4	0.4	0.4	0.4									
-6		5.0	0.25	0.25	0.25	0.25	0.25	0.25	0.25									
-7		7.0	0.15	0.15	0.15	0.15	0.15	0.15	0.15									

*1 : The model numbers above are for the basic port size (Rc) and orifice size. Refer to How to order for other combinations (e.g., for steam).
*2 : The port size model No. is 01 for Rc1/8 (6A), 02 for Rc1/4 (8A), 03 for Rc3/8 (10A) and 04 for Rc1/2 (15A).
*3 : Refer to DC column for the max. working pressure differential of coil with diode.
*4 : The voltage fluctuation range must be within ±10% of the rated voltage.
*5 : Power consumption of coil housings 2E/2G/2H.
*6 : When using at low vacuum, vacuum the OUT port side.
*7 : Power consumption of coil housings 6C/6E/6G/6H.
*8 : DC voltage of coil housings 2E/2G/2H, and max. working pressure differential of coil housings 6C/6E/6G/6H.
*9 : The 100 VAC (50/60 Hz) can be used with 110 VAC (60 Hz). The 200 VAC (50/60 Hz) can be used with 220 VAC (60 Hz). However, this does not apply to coil housings 5A/5M/5N/5I/5J.

Optional specifications (fluid temperature, ambient temperature, valve seat leakage)

Sealant	Fluoro rubber		Ethylene propylene rubber		PTFE	
Coil (thermal class)	Class 130 (B)	Class 180 (H)	Class 130 (B)	Class 180 (H)	Class 130 (B)	Class 180 (H)
Fluid temperature (*1) °C	-10 to 60	-10 to 90	0 to 60 (*3)	0 to 90 (*3)	-10 to 60	-10 to 184
Ambient temperature °C	-20 to 60	-20 to 100 (*2)	-20 to 60	-20 to 100 (*2)	-20 to 60	-20 to 100 (*2)
Valve seat leakage cm^3/min(ANR)	0.2 or less (air)				300 or less (air)	

*1 : No freezing.
*2 : -20 to 80°C when coil housing is HP terminal box with light.
*3 : The lowest temperature is 0°C since the fluid is water.

Flow characteristics

Model No.	Port size	Orifice size (mm)	Flow characteristics		
			C[dm^3/(s·bar)]	b	Cv
NC					
AB31-$^{01}_{02}$-1	Rc1/8 Rc1/4	1.5	0.29	0.53	0.1
-2		2.0	0.53	0.52	0.15
-3		3.0	1.1	0.52	0.31
-4		3.5	1.7 [1.5]	0.49 [0.47]	0.42 [0.40]
-5		4.0	2.1 [1.9]	0.48 [0.47]	0.54 [0.48]
-6		5.0	3.0 [2.6]	0.42 [0.38]	0.8 [0.62]
AB41-$^{02}_{03}$-1	Rc1/4 Rc3/8	1.5	0.29	0.53	0.1
-2		2.0	0.53	0.52	0.15
-3		3.0	1.1	0.52	0.31
-4		3.5	1.7 [1.5]	0.49 [0.47]	0.42 [0.40]
-5		4.0	2.1 [1.9]	0.48 [0.47]	0.54 [0.48]
-6		5.0	3.0 [2.6]	0.42 [0.38]	0.8 [0.62]
-7		7.0	4.8 [4.6]	0.29 [0.37]	1.0 [0.82]
AB41-$^{03}_{04}$-8	Rc3/8 Rc1/2	10.0	9.3 [8.1]	0.36 [0.31]	1.88 [1.5]
NO					
AB42-$^{02}_{03}$-1	Rc1/4 Rc3/8	1.5	0.29	0.53	0.1
-2		2.0	0.53	0.52	0.15
-3		3.0	1.1	0.52	0.31
-4		3.5	1.7 [1.5]	0.49 [0.47]	0.42 [0.40]
-5		4.0	2.1 [1.9]	0.48 [0.47]	0.54 [0.48]
-6		5.0	3.0 [2.6]	0.42 [0.38]	0.8 [0.62]
-7		7.0	4.8 [4.6]	0.29 [0.37]	1.0 [0.82]

*1 : Effective cross-sectional area S and sonic conductance C are converted as S ≈ 5.0 x C.
*2 : Dimensions shown in [ ] are for stainless steel body.

How to order

● NC

AB31 - 02 - 3 - 0 3A A B G S - AC100V

AB41

Model No.

Ⓐ Port size

Ⓑ Orifice size

Ⓒ Body/sealant combination

Ⓓ Coil housing

Ⓔ Manual override (locking)

Ⓕ Mounting plate

Ⓖ Other options

Ⓗ With surge suppressor

Ⓘ Rated voltage

Code	Content	Code	Content	Code	Content	Model No. AB31	AB41	AB41 Low pressure large flow
Ⓐ Port size								
01	Rc1/8	**1G**	G1/8	**1N**	1/8NPT	●		
02	Rc1/4	**2G**	G1/4	**2N**	1/4NPT	●	●	
03	Rc3/8	**3G**	G3/8	**3N**	3/8NPT		●	●
04	Rc1/2	**4G**	G1/2	**4N**	1/2NPT			●

Ⓑ Orifice size				
1	φ 1.5	●	●	
2	φ 2	●	●	
3	φ 3	●	●	
4	φ 3.5	●	●	
5	φ 4	●	●	
6	φ 5	●	●	
7	φ 7		●	
8	φ10			●

Ⓒ Body/sealant combination								
		Body	**Seal**	**Treatment**	**Remarks**			
Blank	Std.	Copper alloy or bronze	Nitrile rubber	-	Air/water/low vacuum/kerosene (up to 60°C)	●	●	●
B	Option	Copper alloy or bronze	Fluoro rubber	-	Air/low vacuum/kerosene (up to 90°C *2)	●	●	●
C	Option	Copper alloy or bronze	PTFE	-	Steam (up to 184°C *2)	●	●	
V	Option	Copper alloy or bronze	Fluoro rubber	Vacuum inspection	Low vacuum	●	●	●
D	Option	Stainless steel	Nitrile rubber	-	Air/water/low vacuum/kerosene (up to 60°C)	●	●	●
E	Option	Stainless steel	Fluoro rubber	-	Air/low vacuum/kerosene (up to 90°C *2)	●	●	●
F	Option	Stainless steel	PTFE	-	Steam (up to 184°C *2)	●	●	
W	Option	Stainless steel	Fluoro rubber	Vacuum inspection	Low vacuum	●	●	●
H	Option	Copper alloy	Nitrile rubber	Oil free	Air/water/low vacuum/kerosene (up to 60°C)	●	●	●
J	Option	Copper alloy	Fluoro rubber	Oil free	Air/low vacuum/kerosene (up to 90°C *2)	●	●	●
K	Option	Copper alloy	PTFE	Oil free	Steam (up to 184°C *2)	●	●	
P	Option	Copper alloy	Ethylene propylene rubber	Oil free	Hot water (up to 90°C *2)	●	●	●
L	Option	Stainless steel	Nitrile rubber	Oil free	Air/water/low vacuum/kerosene (up to 60°C)	●	●	●
M	Option	Stainless steel	Fluoro rubber	Oil free	Air/low vacuum/kerosene (up to 90°C *2)	●	●	●
N	Option	Stainless steel	PTFE	Oil free	Steam (up to 184°C *2)	●	●	
R	Option	Stainless steel	Ethylene propylene rubber	Oil free	Hot water (up to 90°C *2)	●	●	●

Refer to Intro Page 39 for reference on material combinations.

Ⓓ Coil housing					
Content					
Blank	Std.	Grommet lead wire	●	●	●
2E	Option	With DIN terminal box (G1/2)	●	●	●
2G	Option	With DIN terminal box (Pg11)	●	●	●
2H	Option	DIN terminal box with small lamp (Pg11)	●	●	●
3A	Option	Open frame: Lead wire	●	●	●
3M	Option	Open frame: With HP terminal box (G1/2)	●	●	●
3N	Option	Open frame: HP terminal box with lamp (G1/2)	●	●	●
3I	Option	Open frame: HP terminal box (IP65 or equivalent) (G1/2)	●	●	●
3J	Option	Open frame: HP terminal box with lamp (IP65 or equivalent) (G1/2)	●	●	●
4A	Option	Open frame (Thermal class 180 (H)): Lead wire	●	●	●
4M	Option	Open frame (Thermal class 180 (H)): With HP terminal box (G1/2)	●	●	●
4N	Option	Open frame (Thermal class 180 (H)): HP terminal box with lamp (G1/2)	●	●	●
5A	Option	Open frame (diode integrated): Lead wire	●	●	●
5M	Option	Open frame (diode integrated): With HP terminal box (G1/2)	●	●	●
5N	Option	Open frame (diode integrated): HP terminal box with lamp (G1/2)	●	●	●
5I	Option	Open frame (diode integrated): HP terminal box (IP65 or equivalent) (G1/2)	●	●	●
5J	Option	Open frame (diode integrated): HP terminal box with lamp (IP65 or equivalent) (G1/2)	●	●	●
6C	Option	Grommet lead wire 7W		●	
6E	Option	With DIN terminal box (G1/2) 7W		●	
6G	Option	With DIN terminal box (Pg11) 7W		●	
6H	Option	DIN terminal box with small lamp (Pg11) 7W		●	

The combinations indicated with ● in the above table are available.

[Example of model No. 1]

AB41-02-3-000AS-AC100V

Model: AB41

- Ⓐ Port size : Rc1/4
- Ⓑ Orifice size : φ3
- Ⓒ Body/sealant combination : Body - copper alloy, sealant - nitrile rubber
- Ⓓ Coil housing : Grommet lead wire
- Ⓔ Manual override (locking) : With
- Ⓕ/Ⓖ/Ⓗ : None
- Ⓗ Surge suppressor : With surge suppressor
- Ⓘ Rated voltage : 100 VAC 50/60 Hz, 110 VAC 60 Hz

⚠ Precautions for model No. selection

Notes for Ⓒ

*1 : Leave blank for standard. However, to select options in Ⓓ, Ⓔ, Ⓕ, Ⓖ or Ⓗ, indicate 0 for Item Ⓒ.
*2 : When Item Ⓓ 4A/4M/4N is selected.
*3 : The body for low pressure large flow rate AB41-$^{03}_{04}$-8 is bronze (standard) or stainless steel (optional).
*4 : For option codes V and W, vacuum is inspected at "leakage rate: 1.33 x 10^{-6} Pa·m^3/s or less".
*5 : When using low pressure large flow rate AB41-$^{03}_{04}$-8 with Item Ⓒ V/W, DC voltage type and Item Ⓓ 5A/5M/5N/5I/5J are not available.
*6 : The ethylene propylene rubber seal combination (Item Ⓒ P/R) cannot be used with air. (Compressed air contains oil, and ethylene propylene rubber is not oil-resistant.)
*7 : When Item Ⓒ is C, F, K, P, N or R, the Item Ⓓ coil housings 6C, 6E, 6G and 6H cannot be selected.

Notes for Ⓓ

*8 : Leave blank for the standard coil housing. However, to select options in Ⓔ, Ⓕ, Ⓖ or Ⓗ, indicate 00 for Item Ⓓ.
*9 : Coils for 5A/5M/5N/5I/5J have a diode to convert AC to DC voltage.
*10 : A DC coil for steam is available for AB41. Contact CKD for more information.
*11 : For 6C/6E/6G/6H, only AB41 is available.
*12 : The coil housings 6C, 6E and 6G are 12 VDC and 24 VDC dedicated. 6H is 24 VDC dedicated.

Code	Content		Model No. AB31	AB41	AB41 Low pressure large flow
Ⓔ Manual override (locking)					
Blank	None		●	●	●
A	With manual override		●	●	
Ⓕ Mounting plate					
Blank	None		●	●	●
B	With mounting plate		●	●	●
Ⓖ For cable gland and conduit combinations, refer to the compatible coil housings below.					
Blank	None		●	●	●
D	A-15a	Marine cable gland	●	●	●
E	A-15b	Marine cable gland	●	●	●
F	A-15c	Marine cable gland	●	●	●
G	CTC19	Conduit piping	●	●	●
H	G1/2	Conduit piping	●	●	●
Ⓗ For surge suppressor combinations, refer to the compatible coil housings below.					
Blank	Without surge suppressor		●	●	●
S	With surge suppressor		●	●	●
Ⓘ Rated voltage					
Refer to the table on the right for the voltage.			●	●	●

Ⓘ Rated voltage	
Blank	100 VAC, 200 VAC
2E	100 VAC, 200 VAC, 12 VDC, 24 VDC, 48 VDC, 100 VDC
2G	100 VAC, 200 VAC, 12 VDC, 24 VDC, 48 VDC, 100 VDC
2H	100 VAC, 200 VAC, 24 VDC
3A	100 VAC, 200 VAC, 12 VDC, 24 VDC, 48 VDC, 100 VDC
3M	100 VAC, 200 VAC, 12 VDC, 24 VDC, 48 VDC, 101 VDC
3N	100 VAC, 200 VAC, 12 VDC, 24 VDC, 100 VDC
3I	100 VAC, 200 VAC, 12 VDC, 24 VDC, 48 VDC, 101 VDC
3J	100 VAC, 200 VAC, 12 VDC, 24 VDC, 100 VDC
4A	100 VAC, 200 VAC
4M	100 VAC, 200 VAC
4N	100 VAC, 200 VAC
5A	100 VAC, 200 VAC
5M	100 VAC, 200 VAC
5N	100 VAC, 200 VAC
5I	100 VAC, 200 VAC
5J	100 VAC, 200 VAC
6C	12 VDC, 24 VDC
6E	12 VDC, 24 VDC
6G	12 VDC, 24 VDC
6H	24 VDC

● Compatible coil housing

		Blank	2E	2G	2H	3A	3M	3N	3I	3J	4A	4M	4N	5A	5M	5N	5I	5J	6C	6E	6G	6H
Ⓖ Cable gland/conduit																						
D	A-15a						●	●	●	●		●	●		●	●	●	●				
E	A-15b						●	●	●	●		●	●		●	●	●	●				
F	A-15c						●	●	●	●		●	●		●	●	●	●				
G	CTC19					●					●			●								
H	G1/2				●	●					●			●								●
Ⓗ For surge suppressor compatible coil housings, refer to page 156.																						
S	With surge suppressor	●	●	●	●	●	●	●	●	●	●								●	●	●	

⚠ Precautions for model No. selection

Notes for Ⓔ to Ⓗ

*13: Manual override (Item Ⓔ A) cannot be mounted on the low pressure large flow rate AB41-$^{03}_{04}$-8.
*14: When Item Ⓒ is C, F, K, N, V or W, the manual override (Item Ⓔ A) is not available.
*15: For Ⓖ, select an option from D, E, F, G and H.
*16: The surge suppressor is attached with the lead wire coil. When selecting a coil with a terminal box, the surge suppressor is mounted in the terminal box.
*17: As standard, the surge suppressor is built into the the coil with diode and the 24 VDC coil (Item Ⓓ 2H/6H), so the surge suppressor code S cannot be selected.
*18: Tropicalization (rust-proof coating) is available as a measure against rust. Contact CKD for more information.
Note that tropicalization is not available when the manual override option (A) and the coil option 6C/6E/6G/6H are selected.

Notes for Ⓘ

*20: 100 VAC coil is compatible with 100 VAC 50/60 Hz and 110 VAC 60 Hz, and 200 VAC coil is compatible with 200 VAC 50/60 Hz and 220 VAC 60 Hz. However, coils for Item Ⓓ 5A/5M/5N/5I/5J can be used with 100 VAC 50/60 Hz and 200 VAC 50/60 Hz only.
*21: For voltages other than above, contact CKD.
*22: The lead wire is available in the standard 300 mm length, and 500 mm, 1000 mm, 2000 mm and 3000 mm lengths. Contact CKD for more information.

Blank 6C		● Grommet lead wire 300 mm
2E 2G 2H 6E 6G 6H		● DIN terminal box
3A 4A 5A		● Open frame lead wire 300 mm ● 4A (Thermal class 180 (H)) ● 5A (diode integrated)
3M 3N 4M 4N 5M 5N		● Open frame HP terminal box ● 4M, 4N (Thermal class 180 (H)) ● 5M, 5N (diode integrated)
3I 3J 5I 5J		● Open frame HP terminal box (IP65 or equivalent) ● 5I, 5J (diode integrated)
G H		● Conduit ● G(CTC19) ● H(G1/2)

Refer to page 148 for coil selection.

How to order

● NO

AB42 - 02 - 4 - L 3A A B ( ) ( ) - AC100V

- AB42: Model No.
- 02: Ⓐ Port size
- 4: Ⓑ Orifice size
- L: Ⓒ Body/sealant combination *1 *2 *3 *4
- 3A: Ⓓ Coil housing
- A: Ⓔ Manual override (locking)
- B: Ⓕ Mounting plate
- ( ): Ⓖ Other options
- ( ): Ⓗ With surge suppressor
- AC100V: Ⓘ Rated voltage

Code	Content	Code	Content	Code	Content
Ⓐ Port size					
02	Rc1/4	**2G**	G1/4	**2N**	1/4NPT
03	Rc3/8	**3G**	G3/8	**3N**	3/8NPT

Ⓑ Orifice size	
1	φ1.5
2	φ2
3	φ3
4	φ3.5
5	φ4
6	φ5
7	φ7

Ⓒ Body/sealant combination

		Body	Seal	Treatment	Remarks
Blank	Std.	Copper alloy	Nitrile rubber	-	Air/water/low vacuum/kerosene (up to 60°C)
B	Option	Copper alloy	Fluoro rubber	-	Air/low vacuum/kerosene (up to 90°C *2)
C	Option	Copper alloy	PTFE	-	Steam (up to 184°C *2)
V	Option	Copper alloy	Fluoro rubber	Vacuum inspection	Low vacuum
D	Option	Stainless steel	Nitrile rubber	-	Air/water/low vacuum/kerosene (up to 60°C)
E	Option	Stainless steel	Fluoro rubber	-	Air/low vacuum/kerosene (up to 90°C *2)
F	Option	Stainless steel	PTFE	-	Steam (up to 184°C *2)
W	Option	Stainless steel	Fluoro rubber	Vacuum inspection	Low vacuum
H	Option	Copper alloy	Nitrile rubber	Oil free	Air/water/low vacuum/kerosene (up to 60°C)
J	Option	Copper alloy	Fluoro rubber	Oil free	Air/low vacuum/kerosene (up to 90°C *2)
K	Option	Copper alloy	PTFE	Oil free	Steam (up to 184°C *2)
P	Option	Copper alloy	Ethylene propylene rubber	Oil free	Hot water (up to 90°C *2)
L	Option	Stainless steel	Nitrile rubber	Oil free	Air/water/low vacuum/kerosene (up to 60°C)
M	Option	Stainless steel	Fluoro rubber	Oil free	Air/low vacuum/kerosene (up to 90°C *2)
N	Option	Stainless steel	PTFE	Oil free	Steam (up to 184°C *2)
R	Option	Stainless steel	Ethylene propylene rubber	Oil free	Hot water (up to 90°C *2)

Refer to Intro Page 39 for reference on material combinations.

Ⓓ to Ⓘ

Refer to the following page for details on the coil housing, other options and voltage, etc.

[Example of model No. 1]
AB42-02-1-AC100V

Model: AB42
- Ⓐ Port size : Rc1/4
- Ⓑ Orifice size : φ1.5
- Ⓒ Body/sealant combination : Body - copper alloy, sealant - nitrile rubber
- Ⓓ Coil housing : Grommet lead wire
- Ⓔ to Ⓗ : None
- Ⓘ Rated voltage : 100 VAC 50/60 Hz, 110 VAC 60 Hz

[Example of model No. 2]
AB42-03-6-000AS-AC100V

Model: AB42
- Ⓐ Port size : Rc3/8
- Ⓑ Orifice size : φ5
- Ⓒ Body/sealant combination : Body - copper alloy, sealant - nitrile rubber
- Ⓓ Coil housing : Grommet lead wire
- Ⓔ Manual override (locking) : Selected
- Ⓕ/Ⓖ : None
- Ⓗ Surge suppressor : With surge suppressor
- Ⓘ Rated voltage : 100 VAC 50/60 Hz, 110 VAC 60 Hz

⚠ Precautions for model No. selection

Notes for Ⓒ

*1 : Leave blank for standard. However, to select options in Ⓓ,Ⓔ,Ⓕ,Ⓖ or Ⓗ, indicate 0 for Item Ⓒ.
*2 : When Item Ⓓ 4A/4M/4N is selected.
*3 : For option codes V and W, vacuum is inspected at "leakage rate: 1.33 x 10^{-6} Pa·m^3/s or less".
*4 : The ethylene propylene rubber seal combination (Item Ⓒ P/R) cannot be used with air. (Compressed air contains oil, and ethylene propylene rubber is not oil-resistant.)

For Items Ⓓ to Ⓘ, the combinations indicated with codes are available.
Note that if options for Items Ⓔ to Ⓗ are not required, they should be left blank.

Ⓓ Coil housing			Ⓔ	Ⓕ	Ⓖ Other options					Ⓗ	Ⓘ Rated voltage
Content			Manual override (Locking)	Mounting plate	Cable gland (marine cable gland)			Conduit (conduit piping)		With surge suppressor	Content
					A-15a	A-15b	A-15c	CTC19	G1/2		
Blank	Std.	Grommet lead wire	A	B						S	100 VAC, 200 VAC
2E	Option	With DIN terminal box (G1/2)	A	B						S	100 VAC, 200 VAC
2G	Option	With DIN terminal box (Pg11)	A	B						S	12 VDC, 24 VDC, 48 VDC, 100 VDC
2H	Option	DIN terminal box with small lamp (Pg11)	A	B					H	S	100 VAC, 200 VAC, 24 VDC
3A	Option	Open frame: Lead wire (IP65 or equivalent)	A	B				G	H	S	100 VAC, 200 VAC
3M	Option	Open frame: With HP terminal box (G1/2)	A	B	D	E	F			S	12 VDC, 24 VDC, 48 VDC, 100 VDC
3N	Option	Open frame: HP terminal box with lamp (G1/2)	A	B	D	E	F			S	100 VAC, 200 VAC, 12 VDC, 24 VDC, 100 VDC
3I	Option	Open frame: HP terminal box (IP65 or equivalent) (G1/2)	A	B	D	E	F			S	100 VAC, 200 VAC, 12 VDC, 24 VDC, 48 VDC, 100 VDC
3J	Option	Open frame: HP term box, lamp (IP65, equiv) (G1/2)	A	B	D	E	F			S	100 VAC, 200 VAC, 12 VDC, 24 VDC, 100 VDC
4A	Option	Open frame (Thermal class 180 (H)): Lead wire	A	B				G	H	S	100 VAC, 200 VAC
4M	Option	Open frame (Thermal class 180 (H)): With HP terminal box (G1/2)	A	B	D	E	F				100 VAC, 200 VAC
4N	Option	Open frame (Thermal class 180 (H)): HP terminal box with lamp (G1/2)	A	B	D	E	F				100 VAC, 200 VAC
5A	Option	Open frame (diode integrated): Lead wire (IP65 or equivalent)	A	B				G	H		100 VAC, 200 VAC
5M	Option	Open frame (diode integrated): With HP terminal box (G1/2)	A	B	D	E	F				100 VAC, 200 VAC
5N	Option	Open frame (diode integrated): HP terminal box with lamp (G1/2)	A	B	D	E	F				100 VAC, 200 VAC
5I	Option	Open frame (diode integrated): HP terminal box (IP65 or equivalent) (G1/2)	A	B	D	E	F				100 VAC, 200 VAC
5J	Option	Open frame (diode integrated): HP term box, lamp (IP65, equiv) (G1/2)	A	B	D	E	F				100 VAC, 200 VAC

⚠ Refer to the following cautions for Items Ⓓ to Ⓘ.

Blank		● Grommet lead wire 300 mm
2E 2G 2H		● DIN terminal box
3A 4A 5A		● Open frame lead wire 300 mm ● 4A (Thermal class 180 (H)) ● 5A (diode integrated)
3M 3N 4M 4N 5M 5N		● Open frame HP terminal box ● 4M, 4N (Thermal class 180 (H)) ● 5M, 5N (diode integrated)
3I 3J 5I 5J		● Open frame HP terminal box (IP65 or equivalent) ● 5I, 5J (diode integrated)

Refer to page 148 for coil selection.

G H		● Conduit ● G(CTC19) ● H(G1/2)

⚠ Precautions for model No. selection

Notes for Ⓓ

*5 : Leave blank for the standard coil housing. However, to select options in Ⓔ, Ⓕ, Ⓖ or Ⓗ, indicate 00 for Item Ⓓ.
*6 : Coils for 5A/5M/5N/5I/5J have a diode to convert AC to DC voltage.

Notes for Ⓔ to Ⓗ

*7 : When Item Ⓒ is C, F, K, N, V or W, the manual override (Item Ⓔ A) is not available.
*8 : For Item Ⓖ, select an option from D, E, F, G and H.
*9 : The surge suppressor is attached with the lead wire coil. When selecting a coil with a terminal box, the surge suppressor is mounted in the terminal box.
*10: As standard, the surge suppressor is built into the coil with diode and the 24 VDC coil (Item Ⓓ 2H), so the surge suppressor S cannot be selected.
*11: Tropicalization (rust-proof coating) is available as a measure against rust. Contact CKD for more information. Note that tropicalization is not available when the manual override option (A) is selected.

Notes for Ⓘ

*13: 100 VAC coil is compatible with 100 VAC 50/60 Hz and 110 VAC 60 Hz, and 200 VAC coil is compatible with 200 VAC 50/60 Hz and 220 VAC 60 Hz. However, coils for Item Ⓓ 5A/5M/5N/5I/5J can be used with 100 VAC 50/60 Hz and 200 VAC 50/60 Hz only.
*14: For voltages other than above, contact CKD.
*15: The lead wire is available in the standard 300 mm length, and 500 mm, 1000 mm, 2000 mm and 3000 mm lengths. Contact CKD for more information.

Internal structure and parts list

● AB31 Series
● AB41-02/03-1 to 7

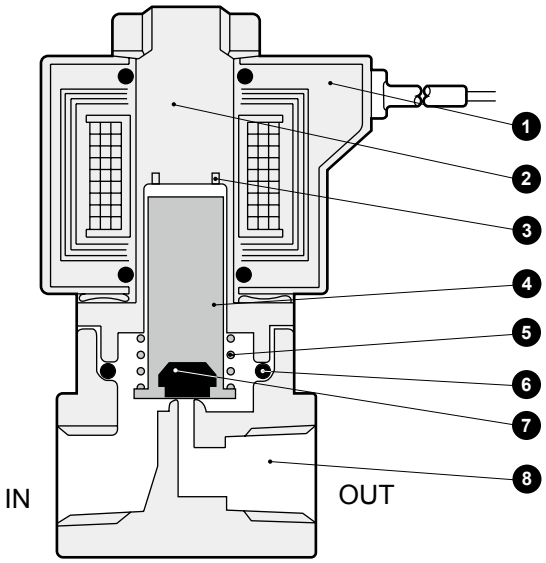

● AB41-03/04-8

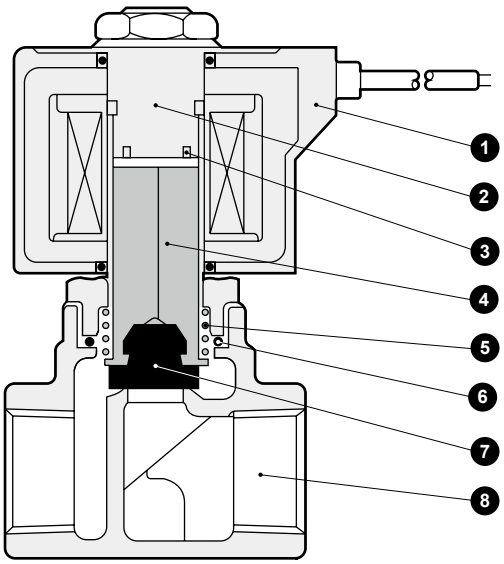

No.	Part name	Material		No.	Part name	Material	
1	Coil	-	-	5	Plunger spring	SUS304	Stainless steel
2	Core assembly	SUS405 or equivalent/316L/403 *1	Stainless steel	6	O-ring	NBR (FKM/EPDM/PTFE) (Size: AS568-019)	NBR: Nitrile rubber FKM: Fluoro rubber EPDM: Ethylene propylene rubber PTFE: Tetrafluoroethylene resin
3	Shading coil	Cu (Ag for stainless steel body)	Copper (silver for stainless steel body)	7	Seal	NBR (FKM/EPDM/PTFE)	
4	Plunger	SUS405 or equiv.	Stainless steel	8	Body	C3771 or CAC408*3 (SUS303)	Copper alloy or bronze *3 (stainless steel)

*1 : When the body/sealant combination code is other than blank and H, or the coil housing code is 6C, 6E, 6G or 6H, the material is SUS405 or equivalent/SUS316L/SUS430.
*2 : ( ) shows options. However, AB41-$^{03}_{04}$-8 PTFE is not available.
*3 : CAC408 for AB41-$^{03}_{04}$-8 (bronze)

Internal structure and parts list

● AB42

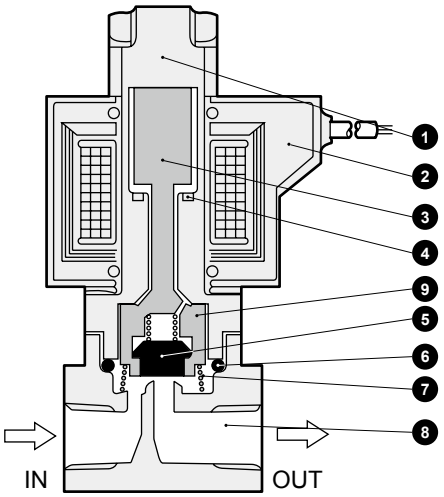

No.	Part name	Material		No.	Part name	Material	
1	Core assembly	SUS405 or equiv./316L/304	Stainless steel	6	O-ring	NBR (FKM/EPDM/PTFE) (Size: AS568-019)	NBR: nitrile rubber (EPDM: ethylene propylene rubber) (FKM: fluoro rubber) (PTFE: tetrafluoroethylene resin)
2	Coil	-	-				
3	Plunger	SUS405 or equiv.	Stainless steel	7	Spring	SUS304	Stainless steel
4	Shading coil	Cu (Ag for stainless steel body)	Copper (silver for stainless steel body)	8	Body	C3771(SUS303)	Copper alloy (stainless steel)
5	Seal	NBR (FKM/EPDM/PTFE)	NBR: nitrile rubber (EPDM: ethylene propylene rubber) (FKM: fluoro rubber) (PTFE: tetrafluoroethylene resin)	9	NO Valve	POM (SUS303/PFA)	Option code : Blank/O/D/H/L/V/W: POM resin : Others: Stainless steel/PFA resin

( ) shows options.

EXA
FWD
HNB/G
USB/G
FAB/G
FGB/G
FVB
FWB/G
FHB
FLB
AB
AG
AP/AD
APK/ADK
DryAir
EX-XPLNprf
XPLNprf
HVB/HVL
S⇕B/NAB
LAD/NAD
Water-Rela
NP/NAP/NVP
SNP
CHB/G
MXB/G
Other valves
SWD/MWD
DustColl
CVE/CVSE
CCH/CPE/D
LifeSci
Gas-Combus
Auto-Water
SpecFld
Custom
Ending

Dimensions: AB31 Series

CAD

● Grommet lead wire
AB31-01/02-1 to 6-* Blank

*1 : The AB31 Series is an NC 2-port solenoid valve. The body and sealant materials are combined according to the working fluid, and the orifice and pressure are selected according to the relation of the required flow rate and pressure. The coil specifications are determined according to the fluid temperature and ambient conditions, allowing the optimum valve to be selected.

*2 : The dimensions are the same for port sizes of G and NPT threads.

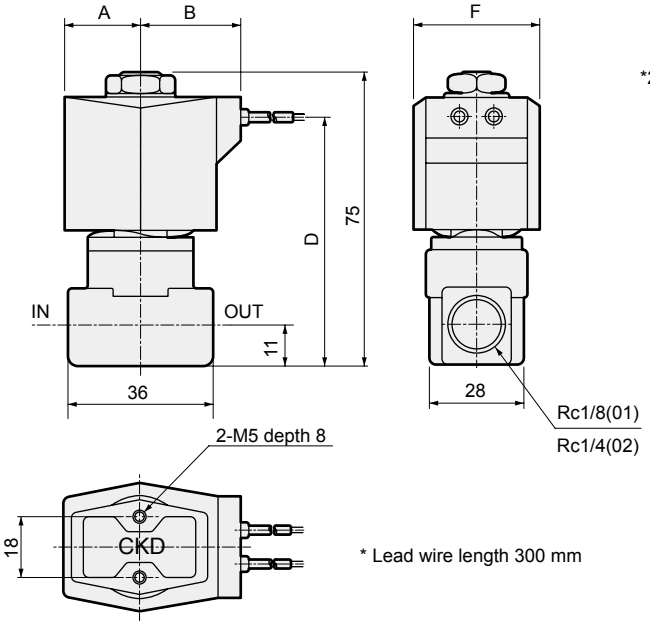

* Lead wire length 300 mm

Model No.	A	B	D	F
AB31-01-1 to 6-AC -02-1 to 6-AC	20	27	63	34

Optional dimensions: AB31 Series

CAD

* Refer to the dimensions of grommet lead wire on the left page for common dimensions.

● With DIN terminal box
AB31-01/02-1 to 6-* 2 E G H

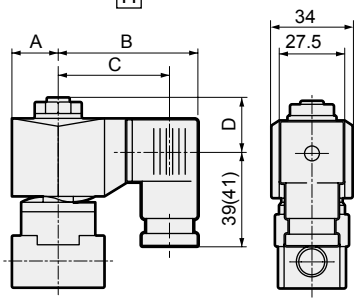

Dimensions shown in ( ) are for G1/2.

Voltage	A	B	C	D
AC (2E/2G/2H)	20	62	50.5(50)	20.5
DC (2E/2G/2H)	21	63.5	52(51.5)	20.5

● Open frame lead wire
AB31-01/02-1 to 6-* 3A 4A 5A

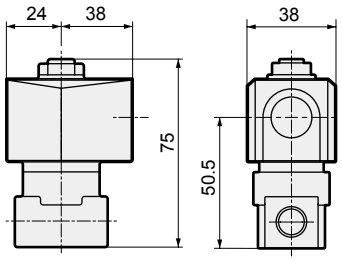

● Open frame + HP terminal box
AB31-01/02-1 to 6-* 3 5 M N I J / 4M 4N

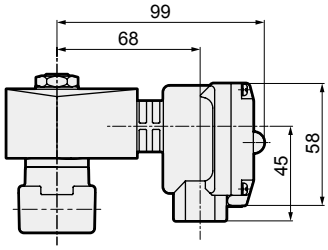

● Open frame + conduit
AB31-01/02-1 to 6-* 3A 4A 5A G H

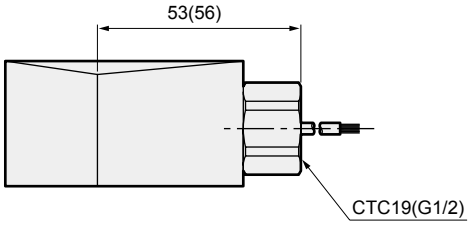

Dimensions shown in ( ) are for G1/2.

● Stainless steel body + grommet lead wire
AB31-01/02-1 to 6- D/E/F/R/W/L/M/N

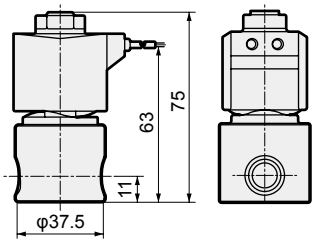

● Manual override (locking)
AB31-01/02-1 to 6-*** A

The figure shows copper alloy body.

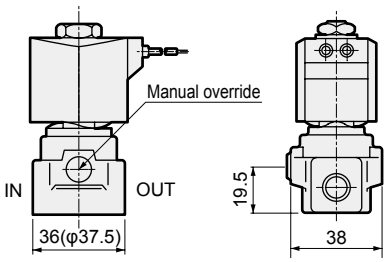

Dimensions shown in ( ) are for stainless steel body.

● Mounting plate
AB31-01/02-1 to 6-*** B

Material: Steel
Zinc plated

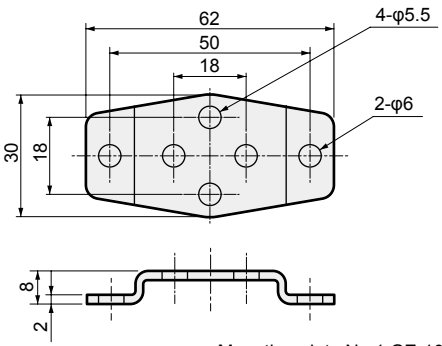

Mounting plate No.1 GE-100106

EXA
FWD
HNB/G
USB/G
FAB/G
FGB/G
FVB
FWB/G
FHB
FLB
AB
AG
AP/AD
APK/ADK
DryAir
EX-XPLNprf
XPLNprf
HVB/HVL
S⇕B/NAB
LAD/NAD
Water-Rela
NP/NAP/NVP
SNP
CHB/G
MXB/G
Other valves
SWD/MWD
DustColl
CVE/CVSE
CCH/CPE/D
LifeSci
Gas-Combus
Auto-Water
SpecFld
Custom
Ending

Dimensions: AB41 Series

CAD

● Grommet lead wire
AB41-02/03-1 to 7-* Blank / 6C

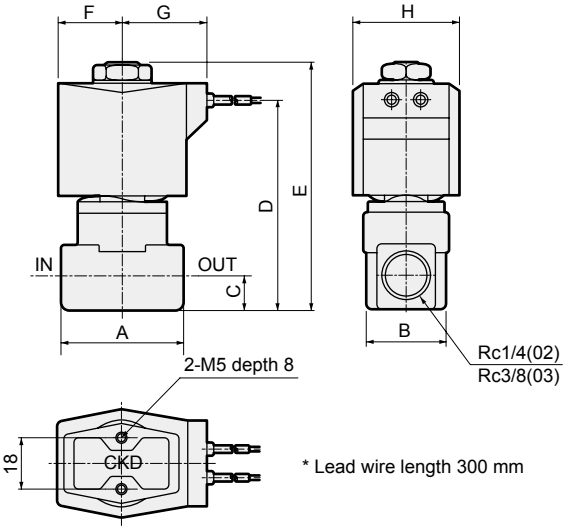

* Lead wire length 300 mm

Model No.	A	B	C	D	E	F	G	H
AB41-02-1 to 6-AC	36	28	11	68	80.5	23.5	30.5	38
AB41-02-7-AC -03-1 to 7-AC	40	28	12	71	83.5	23.5	30.5	38
AB41-02-1 to 6-6C-DC	36	28	11	68	80.5	24	30.5	39
AB41-02-7-6C-DC -03-1 to 7-6C-DC	40	28	12	71	83.5	24	30.5	39

● Grommet lead wire
AB41-03/04-8-* Blank / 6C

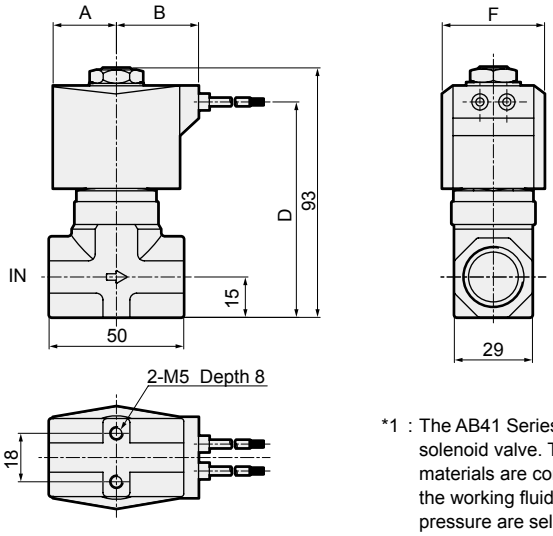

*1 : The AB41 Series is an NC 2-port solenoid valve. The body and sealant materials are combined according to the working fluid, and the orifice and pressure are selected according to the relation of the required flow rate and pressure. The coil specifications are determined according to the fluid temperature and ambient conditions, allowing the optimum valve to be selected.

*2 : The dimensions are the same for port sizes of G and NPT threads.

Model No.	A	B	D	F
AB41-03-8-AC -04-8-AC	23.5	30.5	80	38
AB41-03-8-6C-DC -04-8-6C-DC	24	30.5	80	39

Optional dimensions: AB41 Series

CAD

* Refer to the dimensions of grommet lead wire on the left page for common dimensions.

● With DIN terminal box
AB41-02/03/04-1 to 8-* 2/6 E/G/H

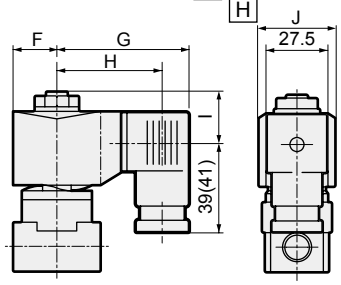

Dimensions shown in ( ) are for G1/2.

Voltage	F	G	H	I	J
AC (2E/2G/2H)	23.5	65.5	54(53.5)	22	38
DC (2E/2G/2H)	23.5	66	54.5(54)	22	38
DC (6E/6G/6H)	24	68	56.5(56)	22	39

● Open frame + HP terminal box
AB41-02/03/04-1 to 8-* 3/5 M/N/I/J · 4M/4N

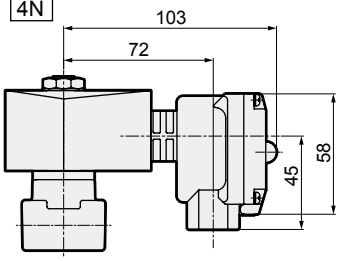

● Stainless steel body + grommet lead wire
AB41-02/03/04-1 to 8- D/F/R/W/L/M/N/E

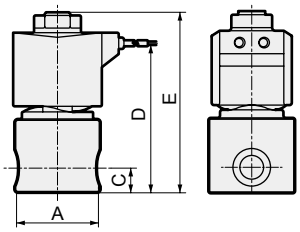

Model No.	A	C	D	E
AB41-02-1 to 6-AC	φ37.5	11	68	80.5
AB41-02-7-AC -03-1 to 7-AC	φ45.0	12	71	83.5
AB41-03-8-AC -04-8-AC	50*1	15	80	93

*1: The max. dimension is φ54.

● Mounting plate
AB41-02/03/04-1 to 8-*** B

Material: Steel
Zinc plated

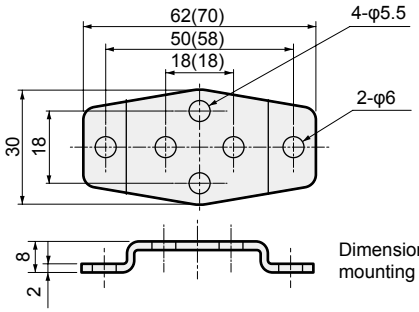

Dimensions shown in ( ) are for mounting plate No. 2.

● Open frame lead wire
AB41-02/03/04-1 to 8-* 3A/4A/5A

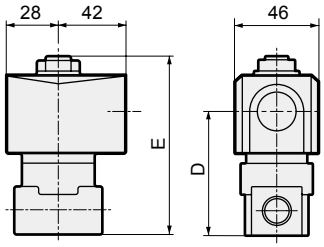

Model No.	D	E
AB41-02-1 to 6-*□A	52.0	80.5
AB41-02-7-*□A -03-1 to 7-*□A	55.0	83.5
AB41-03/04-8-*□A	64	93

● Open frame + conduit
AB41-02/03/04-1 to 8-* 3A/4A/5A G/H

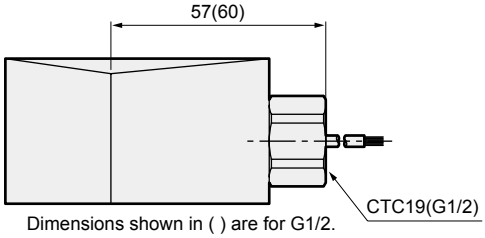

Dimensions shown in ( ) are for G1/2.

● Manual override (locking)
AB41-02/03-1 to 7-*** A
The figure shows copper alloy body.

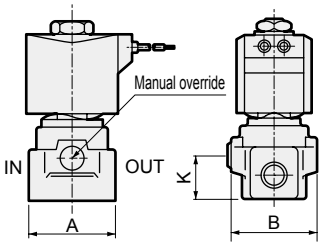

Note: The manual override is not supplied with AB41-03/04-8.

Model No.	A	B	K
AB41-02-1 to 6-***A	36(φ37.5)	38	19.5
AB41-02-7-***A -03-1 to 7-***A	40(φ45.0)	40	22.5

Dimensions shown in ( ) are for stainless steel body.

Model No.	Compatibility
Mounting plate No. 1 GE-100106	● AB41-02/03-1 to 7 Series ● Stainless steel body AB41-02-1 to 6-D/E/F/L/M/N/R/W
Mounting plate No. 2 GE-100159	● AB41-03/04-8 Series ● Stainless steel body AB41-02-7-D/E/F/L/M/N/R/W AB41-03-1 to 7-D/E/F/L/M/N/R/W

Dimensions: AB42 Series

● Grommet lead wire
AB42-02/03-1 to 7

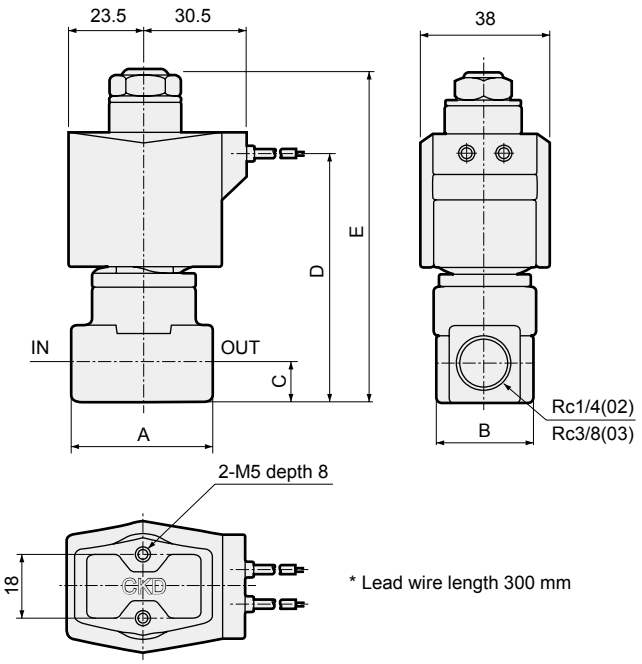

* Lead wire length 300 mm

[Reference] Normally-open direct acting 2-port valve is open when not energized and closed when energized.
This structure is suitable for use in the open state for long periods.

*1 : The dimensions are the same for port sizes of G and NPT threads.

Model No.	A	B	C	D	E
AB42-02-1 to 6	36	28	11	72	94
AB42-02-7	40	28	12	75	97
AB42-03-1 to 7	40	28	12	75	97

Optional dimensions: AB42 Series

CAD

* Refer to the dimensions of grommet lead wire on the left page for common dimensions.

● With DIN terminal box
AB42-02/03-1 to 7-* 2E 2G 2H

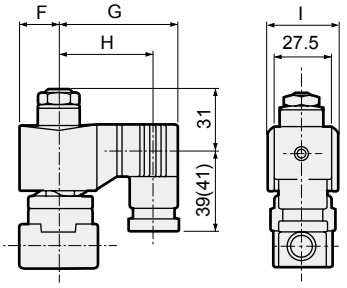

Dimensions shown in ( ) are for G1/2.

Voltage	F	G	H	I
AC	23.5	65.5	54(53.5)	38
DC	28	72	60.5(60)	46

● Open frame lead wire
AB42-02/03-1 to 7-* 3A 4A 5A

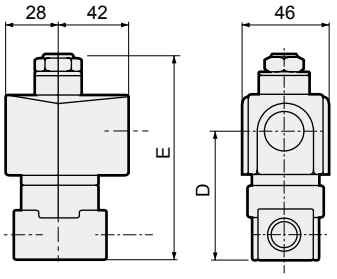

Model No.	D	E
AB42-02-1 to 6	56	94
AB42-02-7	59	97
AB42-03-1 to 7	59	97

● Open frame + HP terminal box
AB42-02/03-1 to 7-* 3 5 M N I J · 4M 4N

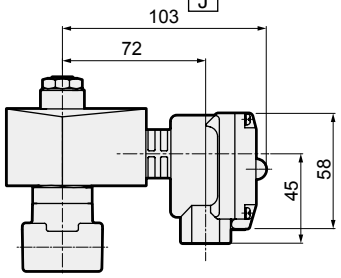

● Open frame + conduit
AB42-02/03-1 to 7-* 3A 4A 5A G H

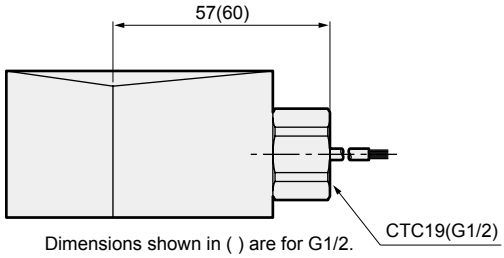

Dimensions shown in ( ) are for G1/2.

● Stainless steel body + grommet lead wire
AB42-02/03-1 to 7- D/E/F/R/W/L/M/N

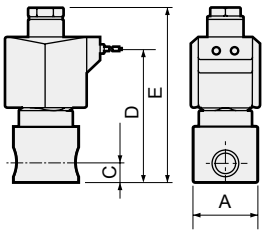

Model No.	A	C	D	E
AB42-02-1 to 6	φ37.5	11	72	94
AB42-02-7	φ45.0	12	75	97
AB42-03-1 to 7	φ45.0	12	75	97

● Manual override (locking)
AB42-02/03-1 to 7-*** A

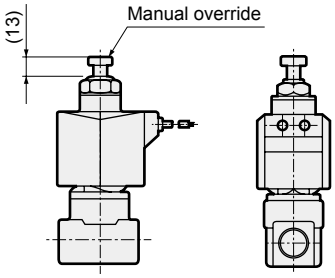

● Mounting plate
AB42-02/03-1 to 7-*** B

Material: Steel
Zinc plated

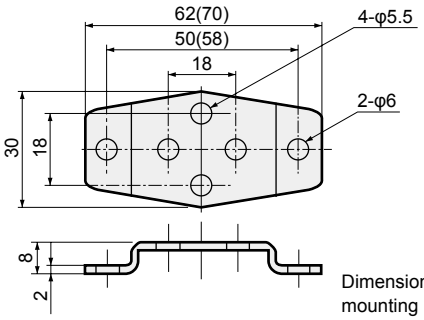

Dimensions shown in ( ) are for mounting plate No. 2.

Category	Compatibility
Mounting plate No. 1 GE-100106	● AB42-02/03-1 to 7 Series ● Stainless steel body AB42-02-1 to 6- D/E/F/L/M/N/R/W
Mounting plate No. 2 GE-100159	● Stainless steel body AB42-02-7- D/E/F/L/M/N/R/W AB42-03-1 to 7- D/E/F/L/M/N/R/W

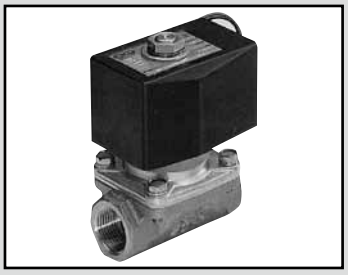

Large bore size direct acting 2-port solenoid valve
(general purpose valve)

AB71 Series

- NC
- Port size: Rc1/2, Rc3/4, Rc1

RoHS CAD

JIS symbol

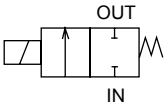

Specifications

1 MPa ≈ 145.0 psi, 1 MPa = 10 bar

Descriptions		AB71-15-12	AB71-20-15	AB71-25-18
Working fluid		Air/water/kerosene/oil (20 mm^2/s)		
Working pressure differential MPa	Air	AC:0 to 0.1, DC:0 to 0.08	AC:0 to 0.07, DC:0 to 0.04	AC:0 to 0.04, DC:0 to 0.03
	Fluids	AC:0 to 0.08, DC:0 to 0.08	AC:0 to 0.05, DC:0 to 0.04	AC:0 to 0.03, DC:0 to 0.03
Proof pressure (water pressure) MPa		1 (≈150 psi, 10 bar)		
Fluid viscosity mm^2/s		20 or less		
Fluid temperature °C		-5 (23°F) to 60 (140°F) (no freezing)		
Ambient temperature °C		-10 (14°F) to 60 (140°F)		
Valve seat leakage cm^3/min(ANR)		0.2 or less (air)		
Port size		Rc1/2	Rc3/4	Rc1
Orifice size mm		12	15	18
Mounting orientation		Limited to the range of vertical direction with the coil on top to horizontal direction.		
Weight kg		1.0	1.2	1.6
Electrical specifications				
Rated voltage		100 VAC50/60 Hz, 200 VAC50/60 Hz, 110 VAC60 Hz, 220 VAC60 Hz, 12 VDC, 24 VDC, 48 VDC, 100 VDC		
Apparent power VA	When holding (50/60 Hz)	32/26		
	When starting (50/60 Hz)	123/106		
Power consumption W		AC:13/11(50/60 Hz), DC:20		

Flow characteristics

Model No.	Port size	Orifice size (mm)	Flow characteristics			
			C[dm^3/(s·bar)]	b	Cv	S(mm^2)
AB71-15-12	Rc1/2	12	15	0.21	2.8	-
AB71-20-15	Rc3/4	15	-	-	4.3	106
AB71-25-18	Rc1	18	-	-	6.3	148

*1: Effective cross-sectional area S and sonic conductance C are converted as S ≈ 5.0 x C.

How to order

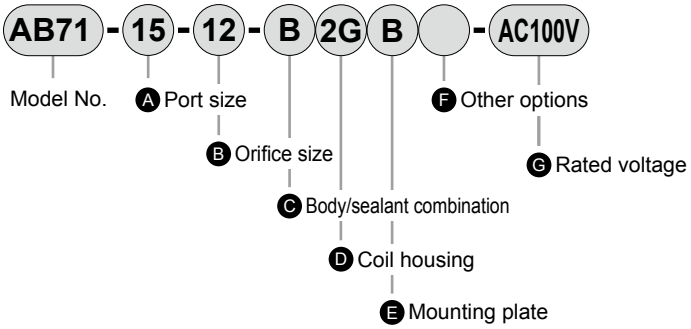

Code	Content
A Port size	
15	Rc1/2
20	Rc3/4
25	Rc1

B Orifice size	
12	φ12 (AB71-15 [port size Rc1/2] only)
15	φ15 (AB71-20 [port size Rc3/4] only)
18	φ18 (AB71-25 [port size Rc1] only)

C Body/sealant combination

	Body	Body	Seal	Treatment
B	Bronze	Copper alloy	Fluoro rubber	-
J	Bronze	Copper alloy	Fluoro rubber	Oil free

[Example of model No.]

AB71-15-12-B2EB-AC100V

Model: AB71

A Port size : Rc1/2
B Orifice size : φ12
C Body/sealant combination : Body - bronze, stuffing - copper alloy, seal - fluoro rubber
D Coil housing : With DIN terminal box (G1/2)
E Mounting plate : With
F Other options : None
G Rated voltage : 100 VAC 50/60 Hz, 110 VAC 60 Hz

D Coil housing				E	F Other options					G Rated voltage
Content				Mounting plate	Cable gland (marine cable gland)			Conduit (conduit piping)		Content
					A-15a	A-15b	A-15c	CTC19	G1/2	
2C	Std.	Grommet lead wire		**B**						100 VAC, 200 VAC
2E	Option	With DIN terminal box (G1/2)		**B**						100 VAC, 200 VAC
2G	Option	With DIN terminal box (Pg11)		**B**						100 VAC, 200 VAC
2H	Option	DIN terminal box with small lamp (Pg11)		**B**					**H**	100 VAC, 200 VAC
3A	Option	Open Frame	Lead wire (IP65 or equivalent)	**B**				**G**	**H**	100 VAC, 200 VAC
3M	Option	Open Frame	With HP terminal box (G1/2)	**B**	**D**	**E**	**F**			12 VDC, 24 VDC, 48 VDC, 100 VDC
3N	Option	Open Frame	HP terminal box with lamp (G1/2)	**B**	**D**	**E**	**F**			100 VAC, 200 VAC, 24 VDC, 100 VDC
5A	Option	Open Frame (diode integrated)	Lead wire (IP65 or equivalent)	**B**				**G**	**H**	100 VAC, 200 VAC
5M	Option	Open Frame (diode integrated)	With HP terminal box (G1/2)	**B**	**D**	**E**	**F**			100 VAC, 200 VAC
5N	Option	Open Frame (diode integrated)	HP terminal box with lamp (G1/2)	**B**	**D**	**E**	**F**			100 VAC, 200 VAC

For Items Ⓓ to Ⓖ, the combinations indicated with codes are available.
Note that if options for Items Ⓔ and Ⓕ are not required, they should be left blank.

⚠ Precautions for model No. selection

Notes for C

*1 : Refer to Intro Page 39 for reference on material combinations.

Notes for D

*2 : Refer to page 148 for coil selection.
*3 : Coils for 5A/5M/5N have a diode to convert AC to DC voltage.
*4 : When the fluid is air, 5A type is recommended.
*5 : For availability of coil of thermal class H, contact CKD.

Notes for F

*6 : For Item Ⓕ, select an option from D, E, F, G and H.

Notes for G

*7 : 100 VAC coil is compatible with 100 VAC 50/60 Hz and 110 VAC 60 Hz, and 200 VAC coil is compatible with 200 VAC 50/60 Hz and 220 VAC 60 Hz. However, Ⓓ 5A/5K/5H coils can be used with 100 VAC 50/60 Hz or 200 VAC 50/60 Hz.
*8 : For voltages other than above, contact CKD.
*9 : The lead wire is available in 300 mm length (standard) and 500 mm length. Contact CKD for more information.

Internal structure and parts list

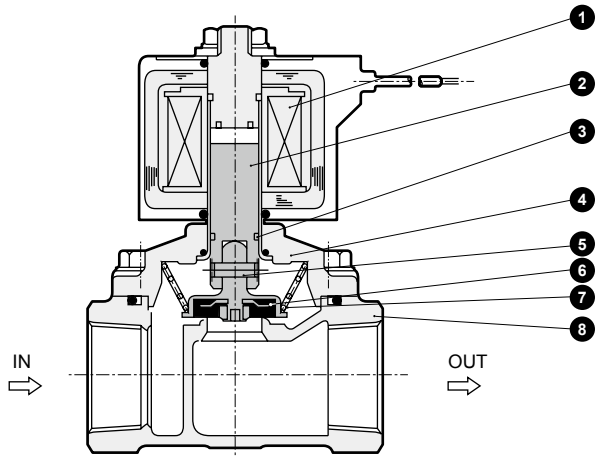

No.	Part name	Material	
1	Coil	-	-
2	Plunger	SUS405	Stainless steel
3	Wear ring	PTFE	Tetrafluoroethylene resin
4	Stuffing assembly (Core assembly)	C3771	Copper alloy
		SUS405, Cu	Stainless steel, copper
5	Spring pin	SUS420	Stainless steel
6	Main valve	SUS304, FKM	Stainless steel, fluoro rubber
7	Main valve spring	SUS304	Stainless steel
8	Body	CAC407	Bronze

Dimensions CAD

● Grommet lead wire
AB71-*-*-*2C

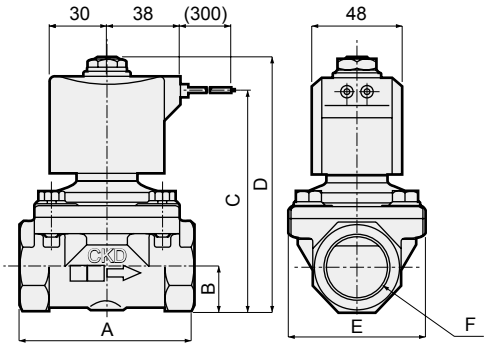

● With mounting plate
AB71-*-*-** B

Material: Steel
Zinc plated

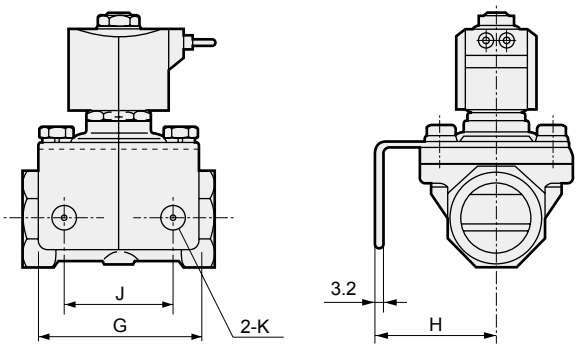

Model No.	A	B	C	D	E	F	G	H	J	K
AB71-15-12	71	14.5	95	110.5	50	Rc1/2	56	45	40	φ9
AB71-20-15	80	17.5	101	116	60	Rc3/4	63	50	45	φ9
AB71-25-18	90	22.5	111	126	71	Rc1	75	56	50	φ11

Optional dimensions

● With DIN terminal box
AB71-*-*-*2 [E / G / H]

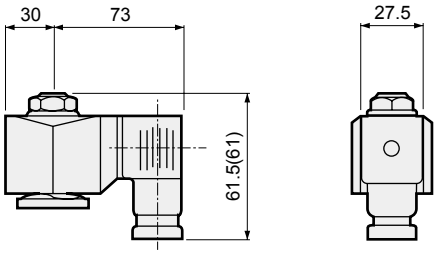

Dimensions shown in ( ) are for G1/2.

● Open frame lead wire
AB71-*-*-* [3A / 5A]

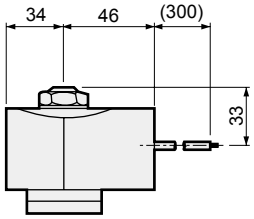

● Open frame + HP terminal box
AB71-*-*-* [3 / 5] [M / N]

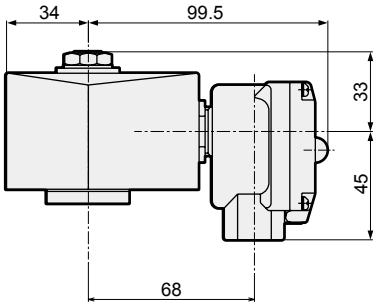

● Open frame + conduit
AB71-*-*-* [3A / 5A] [G / H]

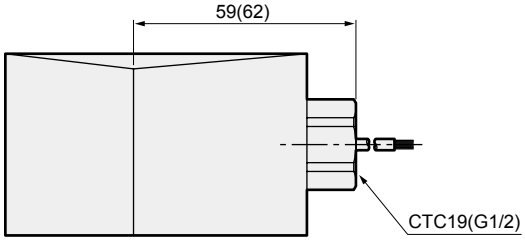

Dimensions shown in ( ) are for G1/2.

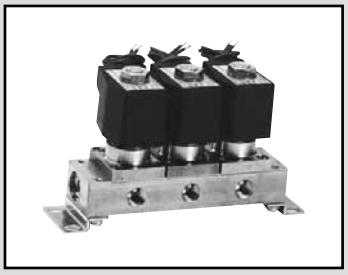

Direct acting 2-port solenoid valve, manifold/actuator
(General purpose valve)

GAB312/GAB352/GAB412/GAB452 Series

- NC
- Common supply (port C pressurization), individual supply (port A pressurization)

Refer to the Ending for details.

JIS symbol

- GAB312/412
  (Common supply/port C pressurization)

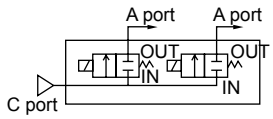

- GAB352/452
  (Individual supply/port A pressurization)

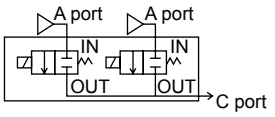

Common specifications

1 MPa ≈ 145.0 psi, 1 MPa = 10 bar

Descriptions	Standard specifications	Optional specifications	
Working fluid	Air/low vacuum [1.33 x 10^2 Pa (abs)]/water/kerosene/oil (50 mm^2/s or less)	Hot water	Steam
Working pressure differential MPa	0 to 5 (refer to max. working pressure differential in individual specifications.)		
Max. working pressure MPa	5 (≈730 psi, 50 bar)		1 (≈150 psi, 10 bar)
Proof pressure (water pressure) MPa	10 (≈1500 psi, 100 bar)		
Fluid temperature (*1) °C	-10 (14°F) to 60 (140°F)	-10 (14°F) to 90 (194°F)	-10 (14°F) to 184 (363.2°F)
Ambient temperature °C	-20 (-4°F) to 60 (140°F)	-20 (-4°F) to 100 (212°F)	
Thermal class	Class 130 (B)	Class 180 (H)	
Atmosphere	Place free of corrosive gas and explosive gas		
Valve structure	Direct acting poppet structure		
Valve seat leakage cm^3/min(ANR)	0.2 or less (air)		300 or less (air)
Mounting orientation	Unrestricted		
Body/seal material	Copper alloy/nitrile rubber	Copper alloy/EPM rubber	Copper alloy/PTFE

*1: No freezing.

Individual specifications

1 MPa ≈ 145.0 psi, 1 MPa = 10 bar

Model No.	Port size	Orifice size (mm)	Max. working pressure differential (MPa) Air AC	Air DC	Water(hot)/Kerosene AC	Water(hot)/Kerosene DC	Oil (50 mm^2/s) AC	Oil (50 mm^2/s) DC	Steam AC	Rated voltage	Apparent power (VA) When holding 50 Hz	When holding 60 Hz	When starting 50 Hz	When starting 60 Hz	Power consumption (W) AC 50/60 Hz	DC
GAB312/352-1	-	1.5	2.5	2.5	2.5	2.5	2.5	2.5	1.0	100 VAC 50/60 Hz *8 200 VAC 50/60 Hz *8 12 VDC 24 VDC 48 VDC 100 VDC	12	10	17	14	5.2/3.8	11 (8.1)*5
-2		2.0	1.5	1.5	1.5	1.5	1.5	1.5	1.0							
-3		3.0	1.0	0.5	0.7	0.5	0.5	0.5	0.7							
-4		3.5	0.6	0.4	0.5	0.4	0.4	0.4	0.5							
-5		4.0	0.4	0.25	0.3	0.25	0.25	0.25	0.3							
-6		5.0	0.2	0.15	0.15	0.15	0.15	0.15	0.15							
GAB412/452-1	-	1.5	5.0	4.0	4.5	4.0	4.0	4.0	1.0		18	15	29	24	6.7/5.7	11 (10.4)*5 (7)*7
-2		2.0	3.0	2.5	2.7	2.5	2.5	2.5	1.0							
-3		3.0	1.5	0.9	1.3	0.9	0.9	0.9	1.0							
-4		3.5	1.2	0.6	0.9	0.6	0.6	0.6	0.9							
-5		4.0	1.0	0.5	0.7	0.5	0.5	0.5	0.7							
-6		5.0	0.6	0.25	0.4	0.25	0.25	0.25	0.4							
-7		7.0	0.25	0.1	0.2	0.1	0.15	0.1	0.2							

*1 : The model numbers above are for basic orifice sizes. Refer to How to order for other combinations (e.g., for steam).
*2 : For port size, refer to How to order (page 174) and dimensions (page 178).
*3 : Refer to DC column for the max. working pressure differential of coil with diode.
*4 : The voltage fluctuation range must be within ±10% of the rated voltage.
*5 : Power consumption of coil housings 2E/2G/2H.
*6 : When using at low vacuum, vacuum the OUT port side.
*7 : Power consumption of coil housings 6C/6E/6G/6H.
*8 : The 100 VAC (50/60 Hz) can be used with 110 VAC (60 Hz). The 200 VAC (50/60 Hz) can be used with 220 VAC (60 Hz). However, this does not apply to coil housings 5A/5M/5N/5I/5J.

Weight

Model No.	Weight (kg) Actuator only	2 stations	3 stations	4 stations	5 stations	6 stations	7 stations	8 stations	9 stations	10 stations
GAB312 GAB352	0.34	1.4	2.0	2.8	3.2	4.0	4.6	5.2	6.0	6.3
GAB412 GAB452	0.42	1.6	2.2	3.1	3.6	4.5	5.1	5.8	6.7	7.1

Optional specifications (fluid temperature, ambient temperature, valve seat leakage)

Sealant	Fluoro rubber		Ethylene propylene rubber		PTFE	
Coil (thermal class)	Class 130 (B)	Class 180 (H)	Class 130 (B)	Class 180 (H)	Class 130 (B)	Class 180 (H)
Fluid temperature (*1) °C	-10 to 60	-10 to 90	0 to 60 (*3)	0 to 90 (*3)	-10 to 60	-10 to 184
Ambient temperature °C	-20 to 60	-20 to 100 (*2)	-20 to 60	-20 to 100 (*2)	-20 to 60	-20 to 100 (*2)
Valve seat leakage cm^3/min(ANR)	0.2 or less (air)				300 or less (air)	

*1 : No freezing.
*2 : -20 to 80°C when coil housing is HP terminal box with lamp.
*3 : The lowest temperature is 0°C since the fluid is water.

Flow characteristics

Model No.	Port size	Orifice size (mm)	Flow characteristics		
			C[dm^3/(s·bar)]	b	Cv
GAB312/352-1	-	1.5	0.29	0.53	0.10
-2		2.0	0.53	0.52	0.15
-3		3.0	1.1	0.52	0.31
-4		3.5	1.5	0.47	0.40
-5		4.0	1.9	0.47	0.48
-6		5.0	2.6	0.38	0.62
GAB412/452-1	-	1.5	0.29	0.53	0.10
-2		2.0	0.53	0.5	0.15
-3		3.0	1.1	0.52	0.31
-4		3.5	1.5	0.47	0.40
-5		4.0	1.9	0.47	0.48
-6		5.0	2.6	0.38	0.62
-7		7.0	4.6	0.37	0.82

*1: Effective cross-sectional area S and sonic conductance C are converted as S ≈ 5.0 x C.

How to order

● Common supply (port C pressurization)

GAB312 ( ) - 1 - 5 - B 3A A G S - AC100V

● Individual supply (port A pressurization)

GAB352

● Common supply (port C pressurization)

GAB412

● Individual supply (port A pressurization)

GAB452

Model No.

Ⓐ Thread

Ⓑ Orifice size

Ⓒ Manifold station No. *2

Ⓓ Body/sealant combination *3 *4 *5 *6 *7

Ⓔ Coil housing

Ⓕ Manual override (locking)

Ⓖ Other options

Ⓗ With surge suppressor

Ⓘ Rated voltage

Code	Content	Model No. GAB312 GAB352	Model No. GAB412 GAB452
Ⓐ Thread			
Blank	Rc	●	●
G	G	●	●
N	NPT	●	●
Ⓑ Orifice size			
1	φ1.5	●	●
2	φ2	●	●
3	φ3	●	●
4	φ3.5	●	●
5	φ4	●	●
6	φ5	●	●
7	φ7		●
Ⓒ Manifold station No.			
2 to 10	2 stations to 10 stations	●	●
0	Actuator only	●	●

Ⓓ Body/sealant combination

		Body	Seal	Treatment	Remarks		
Blank	Std.	Copper alloy	Nitrile rubber	-	Air/water/low vacuum/kerosene (up to 60°C)	●	●
B	Option	Copper alloy	Fluoro rubber	-	Air/low vacuum/kerosene (up to 90°C *4)	●	●
C	Option	Copper alloy	PTFE	-	Steam (up to 184°C *4)	●	●
D	Option	Stainless steel	Nitrile rubber	-	Air/water/low vacuum/kerosene (up to 60°C)	●	●
E	Option	Stainless steel	Fluoro rubber	-	Air/low vacuum/kerosene (up to 90°C *4)	●	●
F	Option	Stainless steel	PTFE	-	Steam (up to 184°C *4)	●	●
H	Option	Copper alloy	Nitrile rubber	Oil free	Air/water/low vacuum/kerosene (up to 60°C)	●	●
J	Option	Copper alloy	Fluoro rubber	Oil free	Air/low vacuum/kerosene (up to 90°C *4)	●	●
K	Option	Copper alloy	PTFE	Oil free	Steam (up to 184°C *4)	●	●
P	Option	Copper alloy	Ethylene propylene rubber	Oil free	Hot water (up to 90°C *4)	●	●
L	Option	Stainless steel	Nitrile rubber	Oil free	Air/water/low vacuum/kerosene (up to 60°C)	●	●
M	Option	Stainless steel	Fluoro rubber	Oil free	Air/low vacuum/kerosene (up to 90°C *4)	●	●
N	Option	Stainless steel	PTFE	Oil free	Steam (up to 184°C *4)	●	●
R	Option	Stainless steel	Ethylene propylene rubber	Oil free	Hot water (up to 90°C *4)	●	●

Refer to Intro Page 39 for reference on material combinations.

Ⓔ to Ⓘ

Refer to the following page for details on the coil housing, other options and voltage, etc.

The combinations indicated with ● in the above table are available.

[Example of model No. 1]
GAB312G-1-3-AC200V

Model: GAB312 (common supply, port C pressurization)

Ⓐ Thread	: G
Ⓑ Orifice size	: φ1.5
Ⓒ Manifold station No.	: 3 stations
Ⓓ Body/sealant combination	: Body - copper alloy, sealant - nitrile rubber
Ⓔ Coil housing	: Grommet lead wire
Ⓕ to Ⓗ	: None
Ⓖ Rated voltage	: 200 VAC 50/60 Hz, 220 VAC 60 Hz

[Example of model No. 2]
GAB352-5-2-000AS-AC200V

Model: GAB352 (individual supply/port A pressurization)

Ⓐ Thread	: Rc
Ⓑ Orifice size	: φ4
Ⓒ Manifold station No.	: 2 stations
Ⓓ Body/sealant combination	: Body - copper alloy, sealant - nitrile rubber
Ⓔ Coil housing	: Grommet lead wire
Ⓕ Manual override (locking)	: Selected
Ⓖ Other options	: None
Ⓗ Surge suppressor	: With surge suppressor
Ⓘ Rated voltage	: 200 VAC 50/60 Hz, 220 VAC 60 Hz

⚠ Precautions for model No. selection

*1 : Orders for only the masking plate and sub-plate are also available. Contact CKD for details.

Notes for Ⓒ to Ⓓ

*2 : For 11 or more manifold station No., contact CKD.
*3 : Leave blank for standard. However, to select options in Ⓔ, Ⓕ, Ⓖ or Ⓗ, indicate 0 for Item Ⓓ.
*4 : When Item Ⓓ 4A/4M/4N is selected.
*5 : The ethylene propylene rubber seal combination (Item Ⓓ P/R) cannot be used with air. (Compressed air contains oil, and ethylene propylene rubber is not oil-resistant.)
*6 : When Item Ⓓ is C, F, K, P, N or R, the Item Ⓔ coil housings 6C, 6E, 6G and 6H cannot be selected.
*7 : For PTFE seal, O-ring material of sub-plate connection will be FKM.

For Items Ⓔ to Ⓘ, the combinations indicated with codes are available.
Note that if options for Items Ⓕ to Ⓗ are not required, they should be left blank.

Ⓔ Coil housing				Ⓕ	Ⓖ Other options					Ⓗ	Ⓘ Rated voltage
Content				Manual override (Locking)	Cable gland (marine cable gland)			Conduit (conduit piping)		With surge suppressor	Content
					A-15a	A-15b	A-15c	CTC19	G1/2		
Blank	Std.	Grommet lead wire		A						S	100 VAC, 200 VAC
2E	Option	With DIN terminal box	(G1/2)	A						S	100 VAC, 200 VAC
2G	Option	With DIN terminal box	(Pg11)	A						S	12 VDC, 24 VDC, 48 VDC, 100 VDC
2H	Option	DIN terminal box with small lamp	(Pg11)	A					H	S	100 VAC, 200 VAC, 24 VDC
3A	Option	Open frame: Lead wire (IP65 or equivalent)		A				G	H	S	100 VAC, 200 VAC
3M	Option	Open frame: With HP terminal box	(G1/2)	A	D	E	F			S	12 VDC, 24 VDC, 48 VDC, 100 VDC
3N	Option	Open frame: HP terminal box with lamp	(G1/2)	A	D	E	F			S	100 VAC, 200 VAC, 12 VDC, 24 VDC, 100 VDC
3I	Option	Open frame: HP terminal box (IP65 or equivalent)	(G1/2)	A	D	E	F			S	100 VAC, 200 VAC, 12 VDC, 24 VDC, 48 VDC, 100 VDC
3J	Option	Open frame: HP term box, lamp (IP65, equiv)	(G1/2)	A	D	E	F			S	100 VAC, 200 VAC, 12 VDC, 24 VDC, 100 VDC
4A	Option	Open frame (Thermal class 180 (H)): Lead wire		A				G	H	S	100 VAC, 200 VAC
4M	Option	Open frame (Thermal class 180 (H)): With HP terminal box	(G1/2)	A	D	E	F				100 VAC, 200 VAC
4N	Option	Open frame (Thermal class 180 (H)): HP terminal box with lamp	(G1/2)	A	D	E	F				100 VAC, 200 VAC
5A	Option	Open frame (diode integrated): Lead wire (IP65 or equivalent)		A				G	H		100 VAC, 200 VAC
5M	Option	Open frame (diode integrated): With HP terminal box	(G1/2)	A	D	E	F				100 VAC, 200 VAC
5N	Option	Open frame (diode integrated): HP terminal box with lamp	(G1/2)	A	D	E	F				100 VAC, 200 VAC
5I	Option	Open frame (diode integrated): HP terminal box (IP65 or equivalent)	(G1/2)	A	D	E	F				100 VAC, 200 VAC
5J	Option	Open frame (diode integrated): HP term box, lamp (IP65, equiv)	(G1/2)	A	D	E	F				100 VAC, 200 VAC
6C		Grommet lead wire	7W	A						S	12 VDC, 24 VDC
6E		With DIN terminal box	(G1/2) 7W	A						S	12 VDC, 24 VDC
6G		With DIN terminal box	(Pg11) 7W	A						S	12 VDC, 24 VDC
6H		DIN terminal box with small lamp	(Pg11) 7W	A					H		24 VDC

⚠ Refer to the following cautions for Items Ⓔ to Ⓘ.

Blank 6C		● Grommet lead wire 300 mm
2E 2G 2H 6E 6G 6H		● DIN terminal box
3A 4A 5A		● Open frame lead wire 300 mm ● 4A (Thermal class 180 (H)) ● 5A (diode integrated)
3M 3N 4M 4N 5M 5N		● Open frame HP terminal box ● 4M, 4N (Thermal class 180 (H)) ● 5M, 5N (diode integrated)
3I 3J 5I 5J		● Open frame HP terminal box (IP65 or equivalent) ● 5I, 5J (diode integrated)

Refer to page 148 for coil selection.

G H		● Conduit ● G(CTC19) ● H(G1/2)

⚠ Precautions for model No. selection

Notes for Ⓔ

*8 : Leave blank for the standard coil housing. However, to select options in Ⓕ, Ⓖ or Ⓗ, indicate 00 for Item Ⓔ.
*9 : Coils for 5A/5M/5N/5I/5J have a diode to convert AC to DC voltage.
*10: A DC coil for steam is available for GAB4*2. Contact CKD for more information.
*11: The coil housings 6C, 6E and 6G are 12 VDC and 24 VDC dedicated. 6H is 24 VDC dedicated.
*12: For 6C/6E/6G/6H, only GAB4*2 is available.

Notes for Ⓕ to Ⓗ

*13: When Item Ⓓ is C, F, K or N, the manual override (Item ⒻA) is not available.
*14: For Item Ⓖ, select an option from D, E, F, G and H.
*15: The surge suppressor is attached with the lead wire coil. When selecting a coil with a terminal box, the surge suppressor is mounted in the terminal box.
*16: As standard, the surge suppressor is built into the coil with diode and the 24 VDC coil (Item Ⓔ 2H/6H), so surge suppressor code S cannot be selected.
*17: Tropicalization (rust-proof coating) is available as a measure against rust. Contact CKD for more information. Note that tropicalization is not available when the manual override option (A) and the coil option 6C/6E/6G/6H are selected.

Notes for Ⓘ

*18: 100 VAC coil is compatible with 100 VAC 50/60 Hz and 110 VAC 60 Hz, and 200 VAC coil is compatible with 200 VAC 50/60 Hz and 220 VAC 60 Hz. However, coils for Item Ⓔ 5A/5M/5N/5I/5J can be used with 100 VAC 50/60 Hz and 200 VAC 50/60 Hz only.
*19: For voltages other than above, contact CKD.
*20: The lead wire is available in the standard 300 mm length, and 500 mm, 1000 mm, 2000 mm and 3000 mm lengths. Contact CKD for more information.

Internal structure and parts list

● GAB312/GAB352/GAB412/GAB452 actuator

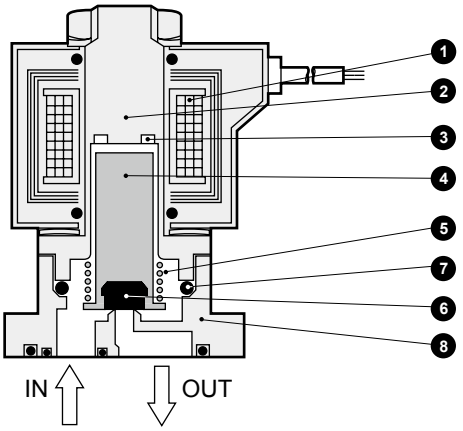

No.	Part name	Material	
1	Coil	-	-
2	Core assembly	SUS405 or equiv./316L/403 *1	Stainless steel
3	Shading coil	Cu (Ag for stainless steel body)	Copper (silver for stainless steel body)
4	Plunger	SUS405 or equiv.	Stainless steel
5	Plunger spring	SUS304	Stainless steel
6	Seal	NBR (FKM/EPDM/PTFE)	NBR: Nitrile rubber FKM: Fluoro rubber EPDM: Ethylene propylene rubber PTFE: Tetrafluoroethylene resin
7	O-ring	NBR (FKM/EPDM/PTFE) (Size: AS568-019)	
8	Body	C3771(SCS13)	Copper alloy (stainless steel)

*1 : When the body/sealant combination code is other than blank and H, or the coil housing code is 6C, 6E, 6G or 6H, the material is SUS405 or equivalent/SUS316L/SUS430.
*2 : ( ) shows options.
*3 : 4 body mounting screws and 2 O-rings are attached to the actuator only.

Internal structure and parts list

● GAB312/GAB352/GAB412/GAB452 manifold

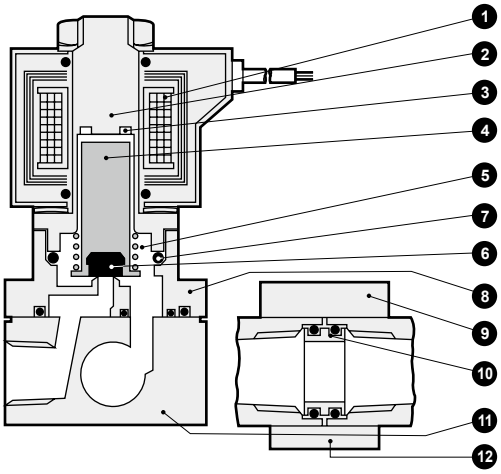

No.	Part name	Material	
1	Coil	-	-
2	Core assembly	SUS405 or equiv./316L/403 *1	Stainless steel
3	Shading coil	Cu (Ag for stainless steel body)	Copper (silver for stainless steel body)
4	Plunger	SUS405 or equiv.	Stainless steel
5	Plunger spring	SUS304	Stainless steel
6	Seal	NBR (FKM/EPDM/PTFE)	(NBR: Nitrile rubber FKM: Fluoro rubber EPDM: Ethylene propylene rubber PTFE: Tetrafluoroethylene resin)
7	O-ring	NBR (FKM/EPDM/PTFE) (Size: AS568-019)	
8	Body	C3771(SCS13)	Copper alloy (stainless steel)
9	Holder	SPCC	Steel
10	Connector	C3604(SUS304)	Copper alloy (stainless steel)
11	Sub-plate	C3604(SUS303)	Copper alloy (stainless steel)
12	Connecting plate	SPCC	Steel

*1 : When the body/sealant combination code is other than blank and H, or the coil housing code is 6C, 6E, 6G or 6H, the material is SUS405 or equivalent/SUS316L/SUS430.

*2 : ( ) shows options.

Dimensions: GAB312/352 Series

● Manifold (grommet lead wire)
GAB312/352-1 to 6- 2 to 10 -* Blank

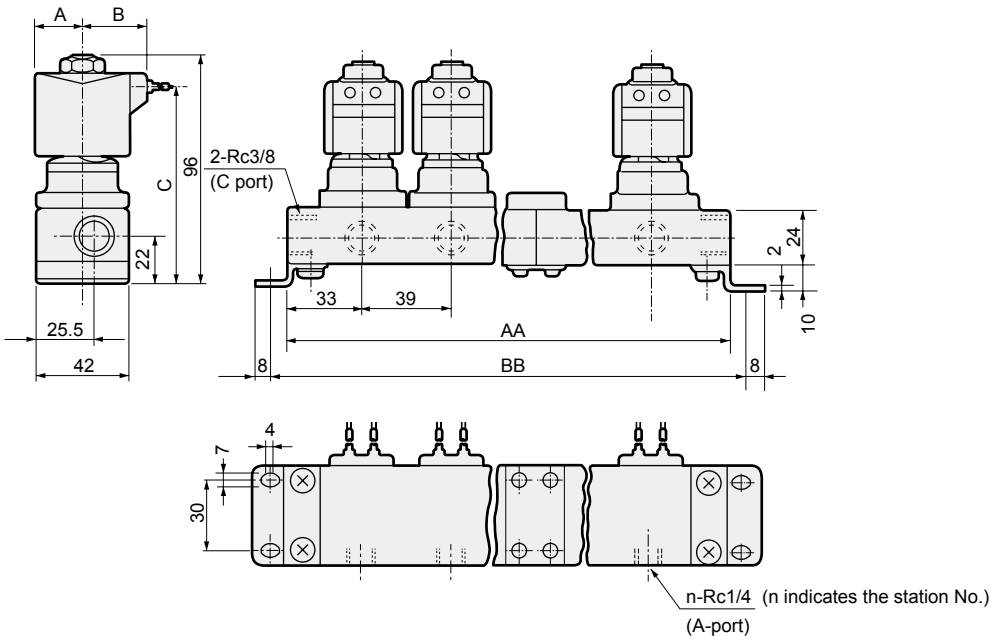

Station No.	AA	BB	Manifold configuration	Station No.	AA	BB	Manifold configuration
2	106	122	2 stations x 1	7	329	345	5 stations + 2 stations
3	145	161	3 stations x 1	8	368	384	5 stations + 3 stations
4	212	228	2 stations x 2	9	435	451	3 stations x 3
5	223	239	5 stations x 1	10	446	462	5 stations x 2
6	290	306	3 stations x 2	Contact CKD for 11 stations or more.			

*1 : Manifold configuration combines 2-station, 3-station and 5-station units.
*2 : The dimensions are the same for port sizes of G and NPT threads.

Model No.	A	B	C
Blank	20	27	84

● Actuator (grommet lead wire)
GAB312/352-1 to 6- 0 -* Blank

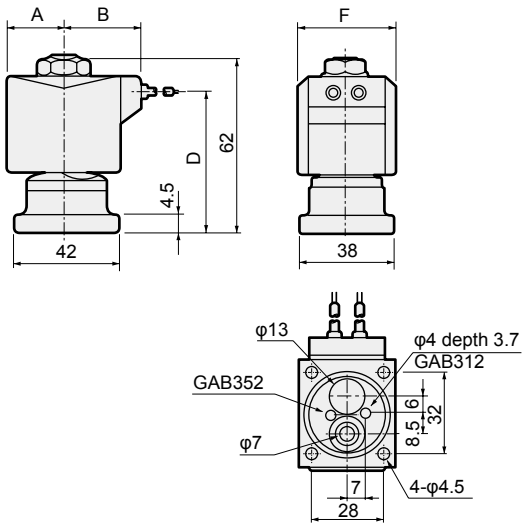

Model No.	A	B	D	F
Blank	20	27	50	34

● Recommended dimensions for actuator mounting

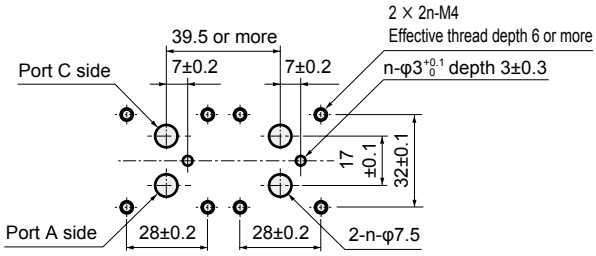

■ Machining drawing when using 2 actuators

Optional dimensions: GAB312/352 Series

* Refer to the dimensions of grommet lead wire on the left page for common dimensions.

● With DIN terminal box
GAB312/352-1 to 6-0 to 10-* 2 E G H

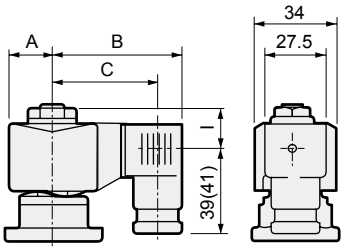

Dimensions shown in ( ) are for G1/2.

Voltage	A	B	C	I
AC (2E/2G/2H)	20	62	50.5(50)	20.5
DC (2E/2G/2H)	21	63.5	52(51.5)	20.5

● Open frame lead wire
GAB312/352-1 to 6-0 to 10-* 3A 4A 5A

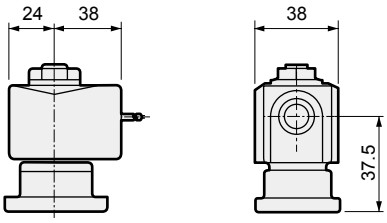

● Open frame + HP terminal box
GAB312/352-1 to 6-0 to 10-* 3 5 M N I J · 4M 4N

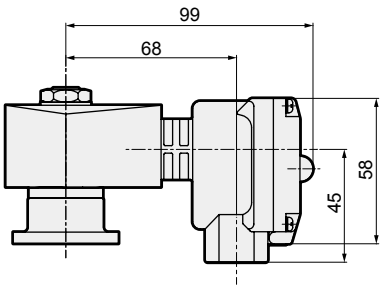

● Open frame + conduit
GAB312/352-1 to 6-0 to 10-* 3A 4A 5A G H

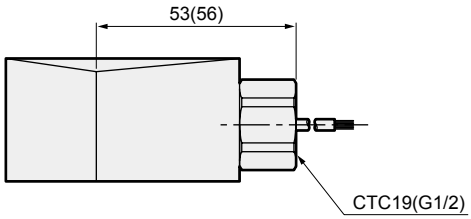

Dimensions shown in ( ) are for G1/2.

● Manual override (locking)
GAB312/352-1 to 6-0 to 10-*** A

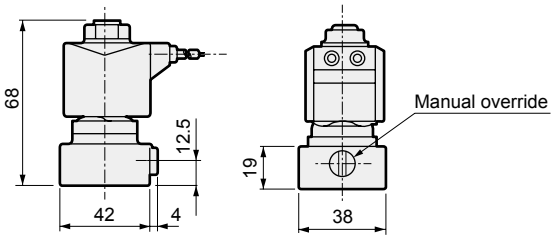

Dimensions: GAB412/452 Series

CAD

● Manifold (grommet lead wire)
GAB412/452-1 to 7- 2 to 10 -* Blank / 6C

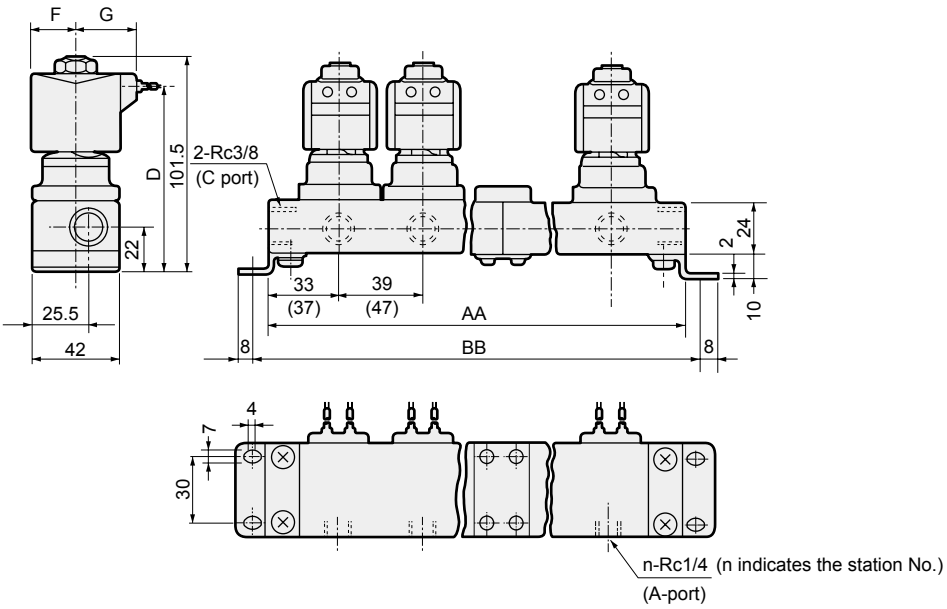

Station No.	AA	BB	Manifold configuration	Station No.	AA	BB	Manifold configuration
2	106(122)	122(138)	2 stations x 1	7	329(385)	345(401)	5 stations + 2 stations
3	145(169)	161(185)	3 stations x 1	8	368(432)	384(448)	5 stations + 3 stations
4	212(244)	228(260)	2 stations x 2	9	435(507)	451(523)	3 stations x 3
5	223(263)	239(279)	5 stations x 1	10	446(526)	462(542)	5 stations x 2
6	290(338)	306(354)	3 stations x 2	Contact CKD for 11 stations or more.			

Model No.	F	G	D
Blank	23.5	30.5	89
6C	24	30.5	87.5

*1 : Manifold configuration combines 2-station, 3-station and 5-station units.
*2 : Dimensions shown in ( ) are for open frame.
*3 : The dimensions are the same for port sizes of G and NPT threads.

● Actuator (grommet lead wire)
GAB412/452-1 to 7-0 -* Blank / 6C

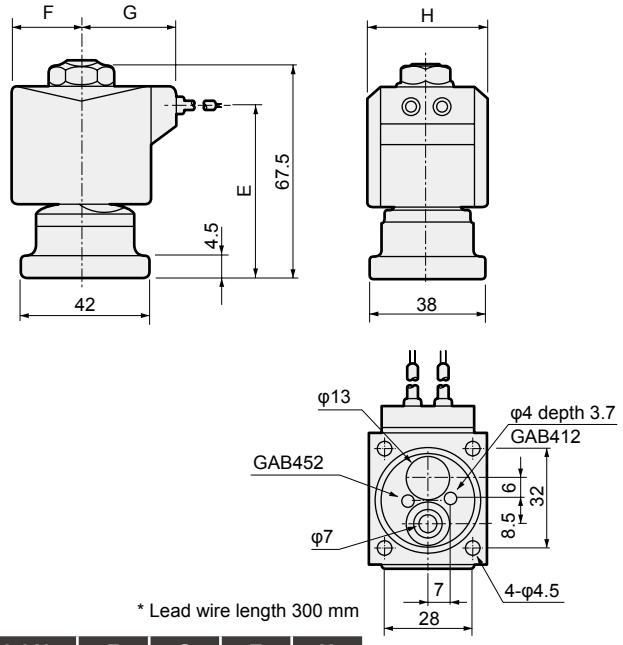

* Lead wire length 300 mm

Model No.	F	G	E	H
Blank	23.5	30.5	55	38
6C	24	30.5	55	39

● Recommended dimensions for actuator mounting

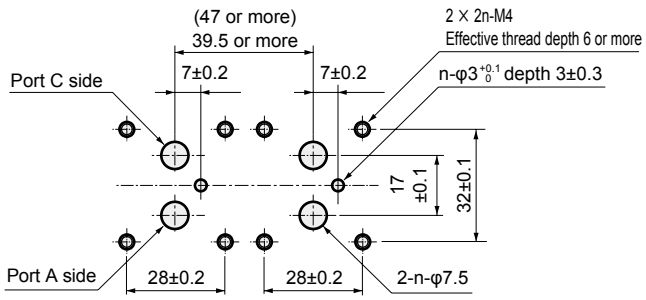

■ Machining drawing when using 2 actuators

Optional dimensions: GAB412/452 Series

CAD

* Refer to the dimensions of grommet lead wire on the left page for common dimensions.

● With DIN terminal box
GAB412/452-1 to 7-0 to 10-* 2 6 E G H

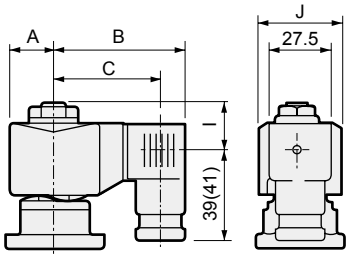

Dimensions shown in ( ) are for G1/2.

Voltage	A	B	C	I	J
AC (2E/2G/2H)	23.5	65.5	54(53.5)	22	38
DC (2E/2G/2H)	23.5	66	54.5(54)	22	38
DC (6E/6G/6H)	24	68	56.5(56)	22	39

● Open frame lead wire
GAB412/452-1 to 7-0 to 10-* 3A 4A 5A

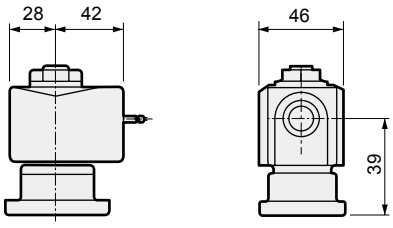

● Open frame + HP terminal box
GAB412/452-1 to 7-0 to 10-* 3 5 M N I J / 4M 4N

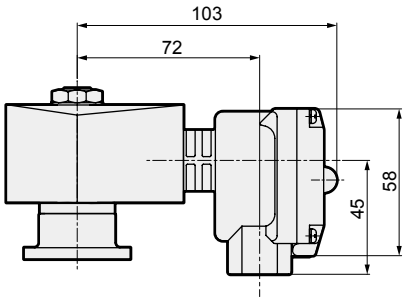

● Open frame + conduit
GAB412/452-1 to 7-0 to 10-* 3A 4A 5A G H

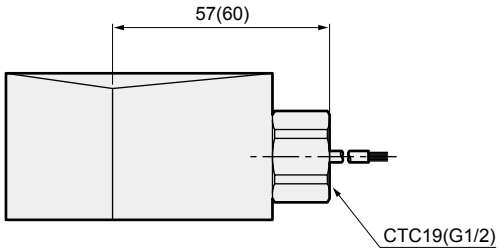

Dimensions shown in ( ) are for G1/2.

● Manual override (locking)
GAB412/452-1 to 7-0 to 10-*** A

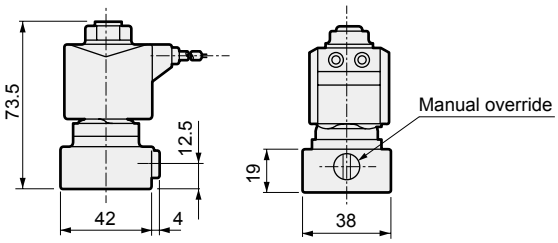

Direct acting 2-port solenoid valve, manifold/actuator
(General purpose valve)

GAB422 Series

- NO
- Common supply (port C pressurization)

Refer to the Ending for details.

Manifold circuit configuration

- GAB422
  (Common supply/port C pressurization)

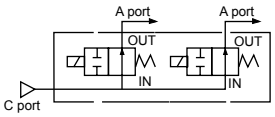

Common specifications

1 MPa ≈ 145.0 psi, 1 MPa = 10 bar

Descriptions	Standard specifications	Optional specifications	
Working fluid	Air/low vacuum [1.33 x 10^2 Pa (abs)]/water/kerosene/oil (50 mm^2/s or less)	Hot water	Steam
Working pressure differential MPa	0 to 2 (refer to max. working pressure differential in individual specifications.)		
Max. working pressure MPa	2 (≈290 psi, 20 bar)		1 (≈150 psi, 10 bar)
Proof pressure (water pressure) MPa	10 (≈1500 psi, 100 bar)		
Fluid temperature (*1) °C	-10 (14°F) to 60 (140°F)	-10 (14°F) to 90 (194°F)	-10 (14°F) to 184 (363.2°F)
Ambient temperature °C	-20 (-4°F) to 60 (140°F)	-20 (-4°F) to 100 (212°F)	
Thermal class	Class 130 (B)	Class 180 (H)	
Atmosphere	Place free of corrosive gas and explosive gas		
Valve structure	Direct acting poppet structure		
Valve seat leakage cm^3/min(ANR)	0.2 or less (air)		300 or less (air)
Mounting orientation	Unrestricted		
Body/seal material	Copper alloy/nitrile rubber	Copper alloy/EPM rubber	Copper alloy/PTFE

*1 : No freezing.

Individual specifications

1 MPa ≈ 145.0 psi, 1 MPa = 10 bar

Descriptions / Model No.	Port size	Orifice size (mm)	Max. working pressure differential (MPa)							Rated voltage	Apparent power (VA)				Power consumption (W)	
			Air		Water(hot)/Kerosene		Oil (50 mm^2/s)		Steam		When holding		When starting		AC	DC
			AC	DC	AC	DC	AC	DC	AC		50 Hz	60 Hz	50 Hz	60 Hz	50/60 Hz	
GAB422-1	-	1.5	2.0	2.0	2.0	2.0	2.0	2.0	1.0	100 VAC 50/60 Hz *7 200 VAC 50/60 Hz *7 12 VDC 24 VDC 48 VDC 100 VDC	22	18	35	29	8.7/6.7	15.5 (14)
GAB422-2		2.0	1.0	1.0	1.0	1.0	1.0	1.0	1.0							
GAB422-3		3.0	0.7	0.7	0.7	0.7	0.7	0.7	0.7							
GAB422-4		3.5	0.5	0.5	0.5	0.5	0.5	0.5	0.5							
GAB422-5		4.0	0.4	0.4	0.4	0.4	0.4	0.4	0.4							
GAB422-6		5.0	0.25	0.25	0.25	0.25	0.25	0.25	0.25							
GAB422-7		7.0	0.15	0.15	0.15	0.15	0.15	0.15	0.15							

*1 : The model numbers above are for basic orifice sizes. Refer to How to order for other combinations.
*2 : For port size, refer to How to order (page 184) and dimensions (page 188).
*3 : The voltage fluctuation range must be within ±10% of the rated voltage.
*4 : Values shown in ( ) are for the DC voltage type with DIN terminal box.
*5 : Refer to DC column for the max. working pressure differential of coil with diode.
*6 : When using at low vacuum, vacuum the OUT port side.
*7 : The 100 VAC (50/60 Hz) can be used with 110 VAC (60 Hz). The 200 VAC (50/60 Hz) can be used with 220 VAC (60 Hz). However, this does not apply to coil housings 5A/5M/5N/5I/5J.

Weight

Model No.	Weight (kg)									
	Actuator only	2 stations	3 stations	4 stations	5 stations	6 stations	7 stations	8 stations	9 stations	10 stations
GAB422	0.47	1.7	2.4	3.3	3.8	4.8	5.5	6.2	7.2	7.6

Optional specifications (fluid temperature, ambient temperature, valve seat leakage)

Sealant		Fluoro rubber		Ethylene propylene rubber		PTFE	
Coil (thermal class)		Class 130 (B)	Class 180 (H)	Class 130 (B)	Class 180 (H)	Class 130 (B)	Class 180 (H)
Fluid temperature (*1)	°C	-10 to 60	-10 to 90	0 to 60 (*3)	0 to 90 (*3)	-10 to 60	-10 to 184
Ambient temperature	°C	-20 to 60	-20 to 100 (*2)	-20 to 60	-20 to 100 (*2)	-20 to 60	-20 to 100 (*2)
Valve seat leakage	cm^3/min(ANR)	0.2 or less (air)				300 or less (air)	

*1 : No freezing.
*2 : -20 to 80°C when coil housing is HP terminal box with lamp.
*3 : The lowest temperature is 0°C since the fluid is water.

Flow characteristics

Model No.	Port size	Orifice size (mm)	Flow characteristics		
			C[dm^3/(s·bar)]	b	Cv
GAB422 -1	-	1.5	0.29	0.53	0.10
-2		2.0	0.53	0.52	0.15
-3		3.0	1.1	0.52	0.31
-4		3.5	1.5	0.47	0.40
-5		4.0	1.9	0.47	0.48
-6		5.0	2.6	0.38	0.62
-7		7.0	4.6	0.37	0.82

*1 : Effective cross-sectional area S and sonic conductance C are converted as S ≈ 5.0 x C.

EXA
FWD
HNB/G
USB/G
FAB/G
FGB/G
FVB
FWB/G
FHB
FLB
AB
AG
AP/AD
APK/ADK
DryAir
EX-XPLNprf
XPLNprf
HVB/HVL
S⇕B/NAB
LAD/NAD
Water-Rela
NP/NAP/NVP
SNP
CHB/G
MXB/G
Other valves
SWD/MWD
DustColl
CVE/CVSE
CCH/CPE/D
LifeSci
Gas-Combus
Auto-Water
SpecFld
Custom
Ending

How to order

GAB422 ◯ - 2 - 5 - 0 3A A G S - AC100V

- Model No.
- Ⓐ Thread
- Ⓑ Orifice size
- Ⓒ Manifold station No. *2
- Ⓓ Body/sealant combination *3 *4 *5 *6
- Ⓔ Coil housing
- Ⓕ Manual override (locking)
- Ⓖ Other options
- Ⓗ With surge suppressor
- Ⓘ Rated voltage

Code	Content
Ⓐ Thread	
Blank	Rc
G	G
N	NPT
Ⓑ Orifice size	
1	φ1.5
2	φ2
3	φ3
4	φ3.5
5	φ4
6	φ5
7	φ7
Ⓒ Manifold station No.	
2	2 stations
to	to
10	10 stations
0	Actuator only

Ⓓ Body/sealant combination

		Body	Seal	Treatment	Remarks
Blank	Std.	Copper alloy	Nitrile rubber	-	Air/water/low vacuum/kerosene (up to 60°C)
B	Option	Copper alloy	Fluoro rubber	-	Air/low vacuum/kerosene (up to 90°C *4)
C	Option	Copper alloy	PTFE	-	Steam (up to 184°C *4)
D	Option	Stainless steel	Nitrile rubber	-	Air/water/low vacuum/kerosene (up to 60°C)
E	Option	Stainless steel	Fluoro rubber	-	Air/low vacuum/kerosene (up to 90°C *4)
F	Option	Stainless steel	PTFE	-	Steam (up to 184°C *4)
H	Option	Copper alloy	Nitrile rubber	Oil free	Air/water/low vacuum/kerosene (up to 60°C)
J	Option	Copper alloy	Fluoro rubber	Oil free	Air/low vacuum/kerosene (up to 90°C *4)
K	Option	Copper alloy	PTFE	Oil free	Steam (up to 184°C *4)
P	Option	Copper alloy	Ethylene propylene rubber	Oil free	Hot water (up to 90°C *4)
L	Option	Stainless steel	Nitrile rubber	Oil free	Air/water/low vacuum/kerosene (up to 60°C)
M	Option	Stainless steel	Fluoro rubber	Oil free	Air/low vacuum/kerosene (up to 90°C *4)
N	Option	Stainless steel	PTFE	Oil free	Steam (up to 184°C *4)
R	Option	Stainless steel	Ethylene propylene rubber	Oil free	Hot water (up to 90°C *4)

Refer to Intro Page 39 for reference on material combinations.

Ⓔ to Ⓘ

For details on the coil housing, other options and voltage, etc., refer to the following page.

[Example of model No. 1]

GAB422N-2-6-AC100V

Model : GAB422 (normally open/common supply)

- Ⓐ Thread : NPT
- Ⓑ Orifice size : φ2
- Ⓒ Manifold station No.: 6 stations
- Ⓓ Body/sealant combination : Body - copper alloy, sealant - nitrile rubber
- Ⓔ Coil housing : Grommet lead wire
- Ⓕ to Ⓗ : None
- Ⓘ Rated voltage : 100 VAC 50/60 Hz, 110 VAC 60 Hz

[Example of model No. 2]

GAB422-3-0-000AS-AC100V

Model : GAB422 (normally open/common supply)

- Ⓐ Thread : Rc
- Ⓑ Orifice size : φ3
- Ⓒ Manifold station No. : Actuator only
- Ⓓ Body/sealant combination : Body - copper alloy, sealant - nitrile rubber
- Ⓔ Coil housing : Grommet lead wire
- Ⓕ Manual override (locking): Selected
- Ⓖ Other options : None
- Ⓗ Surge suppressor : With surge suppressor
- Ⓘ Rated voltage :100 VAC 50/60 Hz, 110 VAC 60 Hz

⚠ Precautions for model No. selection

*1 : Orders for only the masking plate and sub-plate are also available. Contact CKD for details.

Notes for Ⓒ to Ⓓ

*2 : For 11 or more manifold station No., contact CKD.
*3 : Leave blank for standard. However, to select options in Ⓔ,Ⓕ,Ⓖ or Ⓗ, indicate 0 for Item Ⓓ.
*4 : When Item Ⓓ 4A/4M/4N is selected.
*5 : The ethylene propylene rubber seal combination (Item Ⓓ P/R) cannot be used with air. (Compressed air contains oil, and ethylene propylene rubber is not oil-resistant.)
*6 : For PTFE seal, O-ring material of sub-plate connection will be FKM.

For Items Ⓔ to Ⓘ, the combinations indicated with codes are available.
Note that if options for Items Ⓕ to Ⓗ are not required, they should be left blank.

Ⓔ Coil housing				Ⓕ	Ⓖ Other options					Ⓗ	Ⓘ Rated voltage
Content				Manual override (Locking)	Cable gland (marine cable gland)			Conduit (conduit piping)		With surge suppressor	Content
					A-15a	A-15b	A-15c	CTC 19	G 1/2		
Blank	Std.	Grommet lead wire		A						S	100 VAC, 200 VAC
2E	Option	With DIN terminal box (G1/2)									100 VAC, 200 VAC
2G		With DIN terminal box (Pg11)									12 VDC, 24 VDC, 48 VDC, 100 VDC
2H		DIN terminal box with small lamp (Pg11)							H		100 VAC, 200 VAC, 24 VDC
3A		Open frame	Lead wire (IP65 or equivalent)	A				G	H	S	100 VAC, 200 VAC
3M			With HP terminal box(G1/2)		D	E	F				12 VDC, 24 VDC, 48 VDC, 100 VDC
3N			HP terminal box with lamp (G1/2)								100 VAC, 200 VAC, 12 VDC, 24 VDC, 100 VDC
3I			HP terminal box (IP65 or equivalent) (G1/2)								100 VAC, 200 VAC, 12 VDC, 24 VDC, 48 VDC, 100 VDC
3J			HP term box, lamp (IP65, equiv) (G1/2)								100 VAC, 200 VAC, 12 VDC, 24 VDC, 100 VDC
4A		Open frame (Thermal class 180 (H))	Lead wire	A				G	H	S	100 VAC, 200 VAC
4M			With HP terminal box(G1/2)		D	E	F				
4N			HP terminal box with lamp (G1/2)								
5A		Open frame (diode integrated)	Lead wire (IP65 or equivalent)	A				G	H		100 VAC, 200 VAC
5M			With HP terminal box(G1/2)		D	E	F				
5N			HP terminal box with lamp (G1/2)								
5I			HP terminal box (IP65 or equivalent) (G1/2)								
5J			HP term box, lamp (IP65, equiv) (G1/2)								

⚠ Refer to the following cautions for Items Ⓔ to Ⓘ.

Blank		● Grommet lead wire 300 mm
2E 2G 2H		● DIN terminal box
3A 4A 5A		● Open frame lead wire 300 mm ● 4A (Thermal class 180 (H)) ● 5A (diode integrated)
3M 3N 4M 4N 5M 5N		● Open frame HP terminal box ● 4M, 4N (Thermal class 180 (H)) ● 5M, 5N (diode integrated)
3I 3J 5I 5J		● Open frame HP terminal box (IP65 or equivalent) ● 5I, 5J (diode integrated)

Refer to page 148 for coil selection.

G H		● Conduit ● G(CTC19) ● H(G1/2)

⚠ Precautions for model No. selection

Notes for Ⓔ

*7 : Leave blank for the standard coil housing. However, to select options in Ⓕ, Ⓖ or Ⓗ, indicate 00 for Item E.
*8 : Coils for 5A/5M/5N/5I/5J have a diode to convert AC to DC voltage.

Notes for Ⓕ to Ⓗ

*9 : When Item Ⓓ is C, F, K or N, the manual override (Item ⒻA) is not available.
*10: For Item Ⓖ, select an option from D, E, F, G and H.
*11: The surge suppressor is attached with the lead wire coil. When selecting a coil with a terminal box, the surge suppressor is mounted in the terminal box.
*12: As standard, the surge suppressor is built into the coil with diode and the 24 VDC coil (Item Ⓔ2H), so the surge suppressor S cannot be selected.
*13: Tropicalization (rust-proof coating) is available as a measure against rust. Contact CKD for more information. Note that tropicalization is not available when the manual override option (A) is selected.

Notes for Ⓘ

*14: 100 VAC coil is compatible with 100 VAC 50/60 Hz and 110 VAC 60 Hz, and 200 VAC coil is compatible with 200 VAC 50/60 Hz and 220 VAC 60 Hz. However, coils for Item Ⓔ 5A/5M/5N/5I/5J can be used with 100 VAC 50/60 Hz and 200 VAC 50/60 Hz only.
*15: For voltages other than above, contact CKD.
*16: The lead wire is available in the standard 300 mm length, and 500 mm, 1000 mm, 2000 mm and 3000 mm lengths. Contact CKD for more information.

Internal structure and parts list

● GAB422 actuator

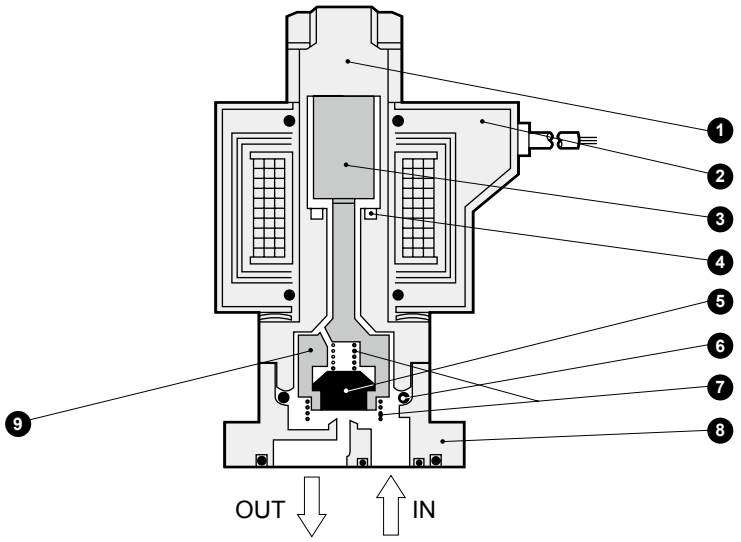

No.	Part name	Material		No.	Part name	Material	
1	Core assembly	SUS405 or equiv./316L/304	Stainless steel	8	Body	C3771(SCS13)	Copper alloy (stainless steel)
2	Coil	-	-	9	NO Valve	POM (SUS303/PFA)	Option code : Blank/O/D/H/L: Polyacetal resin : Other than the above: Stainless steel/perfluoroalkoxy resin
3	Plunger	SUS405 or equiv.	Stainless steel				
4	Shading coil	Cu (Ag for stainless steel body)	Copper (silver for stainless steel body)				
5	Seal	NBR (FKM/EPDM/PTFE)	(NBR: Nitrile rubber FKM: Fluoro rubber EPDM: Ethylene propylene rubber PTFE: Tetrafluoroethylene resin)				
6	O-ring	NBR (FKM/EPDM/PTFE) (Size: AS568-019)					
7	Spring	SUS304	Stainless steel				

* 4 body mounting screws and 2 O-rings are attached to the actuator only.

( ) shows options.

Internal structure and parts list

● GAB422 manifold

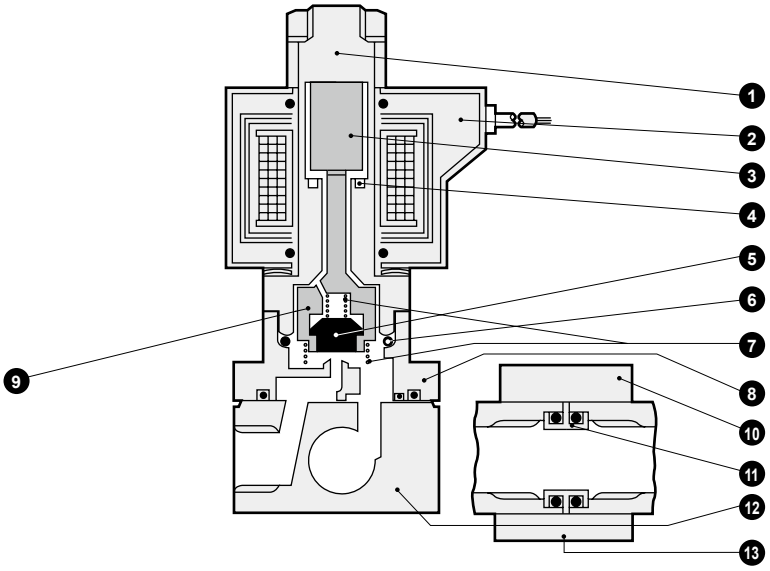

No.	Part name	Material		No.	Part name	Material	
1	Core assembly	SUS405 or equiv./316L/304	Stainless steel	8	Body	C3771(SCS13)	Copper alloy (stainless steel)
2	Coil	-	-	9	NO Valve	POM (SUS303/PFA)	Option code : Blank/O/D/H/L: Polyacetal resin : Other than the above: Stainless steel/perfluoroalkoxy resin
3	Plunger	SUS405 or equiv.	Stainless steel				
4	Shading coil	Cu (Ag for stainless steel body)	Copper (silver for stainless steel body)	10	Holder	SPCC	Steel
5	Seal	NBR (FKM/EPDM/PTFE)	(NBR: Nitrile rubber FKM: Fluoro rubber EPDM: Ethylene propylene rubber PTFE: Tetrafluoroethylene resin)	11	Connector	C3604(SUS304)	Copper alloy (stainless steel)
6	O-ring	NBR (FKM/EPDM/PTFE) (Size: AS568-019)		12	Sub-plate	C3604(SUS303)	Copper alloy (stainless steel)
7	Spring	SUS304	Stainless steel	13	Connecting plate	SPCC	Steel

( ) shows options.

EXA
FWD
HNB/G
USB/G
FAB/G
FGB/G
FVB
FWB/G
FHB
FLB
AB
AG
AP/AD
APK/ADK
DryAir
EX-XPLNprf
XPLNprf
HVB/HVL
S⇕B/NAB
LAD/NAD
Water-Rela
NP/NAP/NVP
SNP
CHB/G
MXB/G
Other valves
SWD/MWD
DustColl
CVE/CVSE
CCH/CPE/D
LifeSci
Gas-Combus
Auto-Water
SpecFld
Custom
Ending

Dimensions: Manifold

● Grommet lead wire
GAB422-1 to 7-[2 to 10]

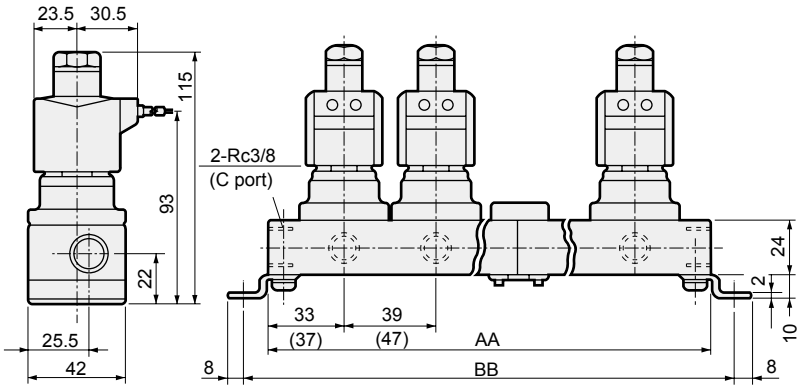

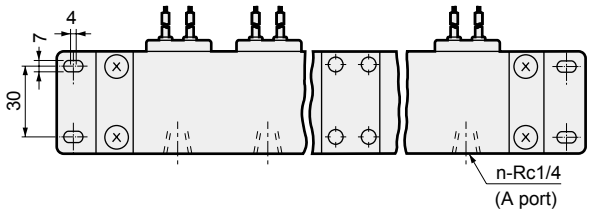

(n indicates the station No.)

Station No.	AA	BB	Manifold configuration	Station No.	AA	BB	Manifold configuration
2	106(122)	122(138)	2 stations x 1	7	329(385)	345(401)	5 stations + 2 stations
3	145(169)	161(185)	3 stations x 1	8	368(432)	384(448)	5 stations + 3 stations
4	212(244)	228(260)	2 stations x 2	9	435(507)	451(523)	3 stations x 3
5	223(263)	239(279)	5 stations x 1	10	446(526)	462(542)	5 stations x 2
6	290(338)	306(354)	3 stations x 2	Contact CKD for 11 stations or more.			

*1 : Manifold configuration combines 2-station, 3-station and 5-station units.
*2 : Dimensions shown in ( ) are for open frame.
*3 : Dimensions for open frame will be applied to the DC voltage type of GAB422 Series with DIN terminal box.
*4 : The dimensions are the same for port sizes of G and NPT threads.

Dimensions: Actuator

● Grommet lead wire
GAB422-1 to 7-[0]

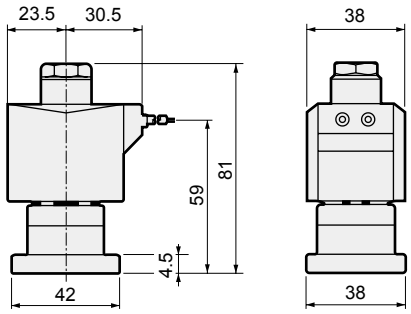

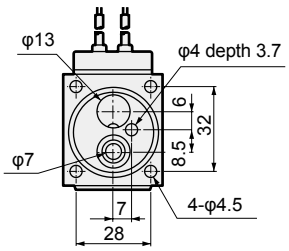

* Lead wire length 300 mm

● Recommended dimensions for actuator mounting

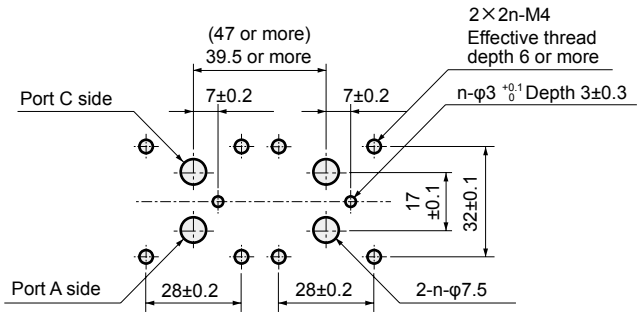

■ Machining drawing when using 2 actuators

Optional dimensions

CAD

* Refer to the dimensions of grommet lead wire on the left page for common dimensions.

● With DIN terminal box
GAB422-1 to 7-0 to 10-* 2E / 2G / 2H

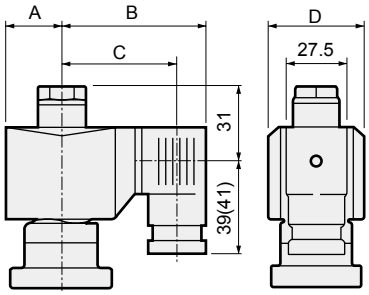

Dimensions shown in ( ) are for G1/2.

Voltage	A	B	C	D
AC	23.5	65.5	54(53.5)	38
DC	28	72	60.5(60)	46

● Open frame lead wire
GAB422-1 to 7-0 to 10-* 3A / 4A / 5A

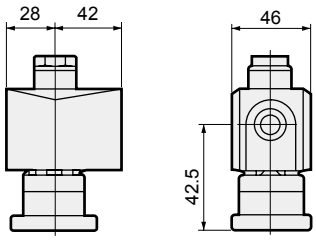

● Open frame + HP terminal box
GAB422-1 to 7-0 to 10-* 3 / 5 M / N / I / J / 4M / 4N

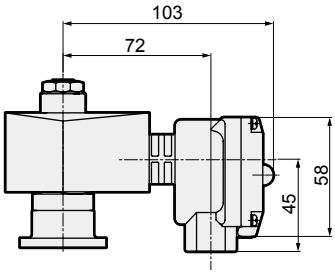

● Open frame + conduit
GAB422-1 to 7-0 to 10-* 3A / 4A / 5A G / H

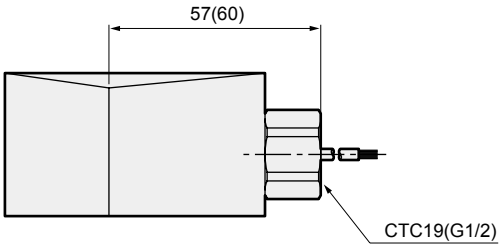

Dimensions shown in ( ) are for G1/2.

● Manual override (locking)
GAB422-1 to 7-0 to 10-***A

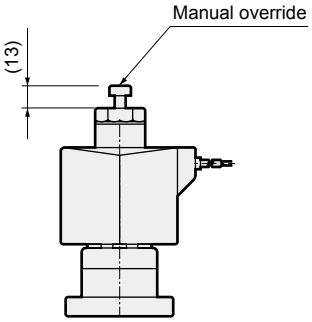

Fluid Control Components: Warnings and Cautions

Be sure to read this section before use.

Precautions for each model series: product-specific cautions

Direct acting 2, 3-port solenoid valve (AB/GAB/AG/GAG)

Design/selection

WARNING

1 Working fluids

(1) Contact CKD before using this valve for active gas (combustion gas, acetylene gas, etc.).
(2) Since valves for LPG (propane gas, butane gas) are available as custom orders, contact CKD.
(3) When using this valve for dry air or inert gas, the life can be shortened considerably due to wear. Use a valve intended for dry air.
(4) This valve cannot be used for maintaining vacuum. Consult with CKD when the vacuum needs to be maintained.

CAUTION

1 Continuous energizing

Use the NO pressurization when using the 3-port valve in a continuously energized state with the NO port pressurized. When continuously energizing the universal or NC pressurization, use a fluoro rubber seal.

2 Suction sound

With the AC voltage specifications, a loud suction sound may be heard momentarily after energizing. To avoid a suction sound, select a coil with a diode or the DC voltage model. The suction sound volume will be reduced.

3 Fluid viscosity

The fluid viscosity must be 50 mm^2/s or less. Malfunctions could occur if the viscosity is higher than 50 mm^2/s.

4 Leakage current from other fluid control components

When operating the solenoid valve with a programmable controller, etc., check that the output leakage current from the programmable controller is within the following specifications.
Failure to observe this could lead to malfunctions.

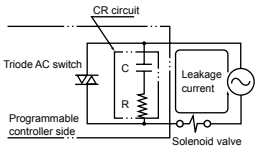

Voltage / Model No.	AC		AC diode		DC			
	100 V	200 V	100 V	200 V	12 V	24 V	48 V	100 V
AB,AG	6 mA or less	3 mA or less	2 mA or less	1 mA or less	2 mA or less	1 mA or less	0.5 mA or less	0.2 mA or less

Mounting, piping and wiring

CAUTION

1 Piping

(1) Always hold the socket with a wrench, etc., if the NO side is a socket.
(2) For steam fluids, steam generated from a boiler will contain a large amount of drainage. Always install a drain trap.
(3) When passing steam, the make-up water in the boiler will contain substances such as “calcium salt” and “magnesium salt”. As these substances will react with oxygen and carbon dioxide, and cause scales and sludge to form, always install a “water softener” and a filter for steam.

2 Wiring

(1) Refer to Intro Page 64 for information on how to wire a terminal box.

When using the product

CAUTION

1 Manual operation

When using a product with a manual override, follow the operations below:
[For NC]
Opening : Insert a flathead screwdriver into the slit on the manual adjustment shaft, and turn it approx. 120° to the right or left. The plunger will rise and the valve will open. (For the 3-port valve, the NC side valve seat will open and the NO side valve seat will close.)
The open state is held even when the screwdriver is removed. Always return the valve to the original position after use.
Closing : From the open position, turn the manual adjustment shaft so that the slit is returned to the perpendicular position, which will lower the plunger and close the valve. (For the 3-port valve, the NC side valve seat will close and the NO side valve seat will open.) (Refer to the figure below)

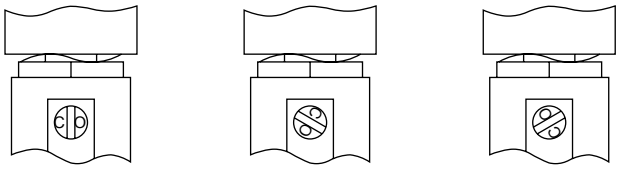

Valve closed state | Valve open state | Valve open state

[For NO]
(1) When closing the valve with manual operation
The manual shaft is threaded, so hold the manual dial and rotate the shaft clockwise.
When the manual dial has been rotated downward 5 to 6 mm and no longer rotates, the solenoid valve will switch to closing operation.
(2) Reset (when not using a manual override)
Always rotate the manual dial counterclockwise and return it to the highest point.

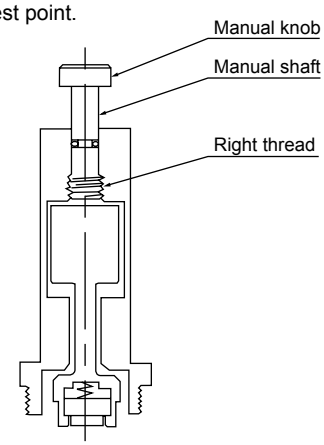

Maintenance

CAUTION

1 When disassembling or assembling, tighten the core assembly and socket with the following tightening torques.

Model No.	Core assembly tightening torque	Socket tightening torque	Nut tightening torque
AB	30 to 45 Nm	-	8 to 16 Nm
AG	30 to 45 Nm	8 to 16 Nm	8 to 16 Nm

Working environment

⚠ CAUTION

IP65 (IEC60529 [IEC529:1989-11]) standards are applied to the test. Avoid use in conditions where water or cutting oil directly contacts the valve.

Degree of protection of IP65 and explanation of test method

● Degree of protection

Note: IP65 is based on the following testing method.

■ IEC (International Electrotechnical Commission) standards (IEC60529 [IEC529:1989-11])

IP-□□

Degree of protection (International Protection)

1st characteristic No. (degree of protection for foreign solid matter)

Grade	Degree of protection	
6	Dust proof 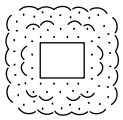	No inflow of dust.

2nd characteristic No. (degree of protection for water entry)

Grade	Degree of protection		Overview of test method (fresh water is used)
5	Protection against water jets 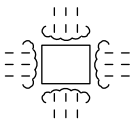	No harmful effects occur even when water is sprayed with nozzles from all directions.	The sample (exterior) is exposed to water jetting of 1 m^2 per minute for a total of 3 minutes or more from all directions with the testing equipment in the figure below.